For decades Parker Pneumatics and Heavy Industrial have been synonymous with durability and long life. High flow-speed N Series poppet valves have been operating in foundries, steel mills, and automotive casting & stamping plants without fail.

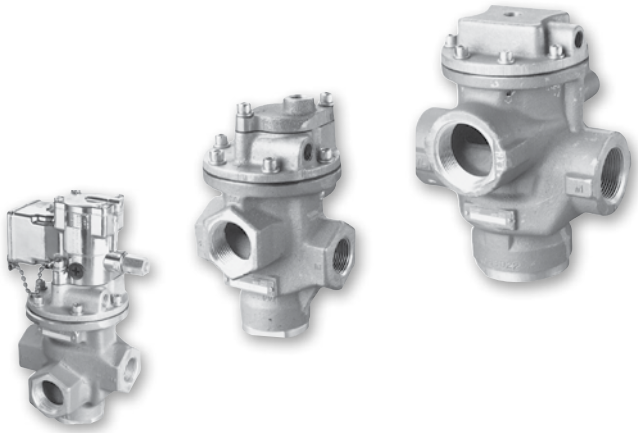

Features
- Continuous duty rated option
- Non-lube service
- Hi-flow, short stroke poppet
- Indicator lights available

Specifications
- 2-way NC
- 3-way NO & NC
- Selector function

Ports
- 3/8" Body – 3/8", 1/2" NPT
- 3/4" Body – 1/2", 3/4", 1" NPT
- 1-1/4" Body – 1", 1-1/4", 1-1/2" NPT
- BSPP "G" threads available

Certification / approval
- Approved to be CE marked (Standard L-Pilot & P-Pilot)
- NEMA 4 Option
- Hazardous Duty Option IP 65 Rating / NEMA 4

Material specifications

Valve body	Cast aluminum
Poppet assembly	Aluminum and stainless steel
Pilot Valve	Zinc, stainless steel, brass, copper, zinc plated steel
Seals	Nitrile

Lubrication

The high speed poppet valves are pre-lubricated to permit use with non-lubricated air. However, air should be lubricated to assure maximum seal life.

F442 lubricating oil is recommended. This oil is specially formulated to provide peak performance and maximum service life from air-operated equipment.

Installation

***CAUTION:* DO NOT RESTRICT THE INLET TO POPPET VALVES**

Restriction of the inlet can starve the air supply to the pilot section of internally piloted poppet valves and result in slow shifting or failure of the valve to shift properly. Always connect the supply line directly to the inlet of the valve using the full pipe size of the valve inlet. Never use a quick coupling to connect a poppet valve to the air supply. On valves with a small inlet port, use of an upstream surge tank may be required at lower operating pressures to insure an adequate air supply and proper operation.

Operating information

Operating pressure:

Solenoid valves - internal pilot

3/8" Basic	3/4" Basic
20 to 140 PSIG (standard	25 to 140 PSIG (200 PSIG option available)

Solenoid valves - external supply

Air pressure thru valve (PSI)	External pilot pressure required (PSI)* 3/8" Basic	3/4" Basic
25 PSI	35-200	35-200
50 PSI	45-200	40-200
75 PSI	55-200	50-200
100 PSI	65-200	65-200

Vacuum up to 1" HG, less than a perfect vacuum.
* With 200 PSI option. Do not exceed 140 PSI with standard pilots.

Internal pilot - remote pilot valve

Air pressure thru valve (PSI)	Remote pilot pressure (PSI) 3/8" Basic	3/4" Basic	1-1/4" Basic
25 PSI	30-250	30-250	30-250
50 PSI	50-250	50-250	50-250
75 PSI	70-250	75-250	70-250
100 PSI	95-250	95-250	90-250
150 PSI	140-250	145-250	130-250
200 PSI	175-250	185-250	175-250
250 PSI	215-250	230-250	205-250

Operating temperature:

Operator type	Duty cycle*	Minimum ambient temperature	Maximum ambient temperature
Standard service	Intermittent	0°F (-18°C)	125°F (52°C)
Solenoid	Continuous	0°F (-18°C)	100°F (38°C)
Special service	Intermittent	0°F (-18°C)	125°F (52°C)
Solenoid	Continuous	0°F (-18°C)	125°F (52°C)
Remote pilot	Not applicable	0°F (-18°C)	200°F (93°C)

* Applications with pilot valves energized for ten (10) minutes or longer with a duty cycle greater than 70% are considered to be continuously energized.

$$\text{Duty cycle} = \frac{\text{Time energized}}{\text{Time energized + time off}} \times 100\% = \%\ \text{Duty Cycle}$$

☐ Most popular. For technical information see CD

Parker Hannifin Corporation
Pneumatic Division
Richland, Michigan
www.parker.com/pneumatics

Single Solenoid, Locking manual override, internal "P" pilot 140 PSI, standard service, junction box w/ light.

Normally Closed Normally Open

Body size	Cv	In / cyl ports	Exhaust port	Voltage	2-way, 2-position normally closed	3-way, 2-position normally closed	3-way, 2-position normally open
3/8"	3.0 to 4.4	3/8"	1/2"	120VAC	**N3153904553**	**N3553904553**	**N3753904553**
				24VDC	**N3153904549**	**N3553904549**	**N3753904549**
		1/2"	1/2"	120VAC	**N3154904553**	**N3554904553**	**N3754904553**
				24VDC	**N3154904549**	**N3554904549**	**N3754904549**
3/4"	9.0 to 11.0	1/2"	3/4"	120VAC	**N3155904553**	**N3555904553**	**N3755904553**
				24VDC	**N3155904549**	**N3555904549**	**N3755904549**
		3/4"	1"	120VAC	**N3156904553**	**N3556904553**	**N3756904553**
				24VDC	**N3156904549**	**N3556904549**	**N3756904549**
		1"	1"	120VAC	**N3157904553**	**N3557904553**	**N3757904553**
				24VDC	**N3157904549**	**N3557904549**	**N3757904549**

Single Solenoid, Locking manual override, internal "P" pilot 125 PSI, standard service, P-pilot junction box w/ light.

Normally Closed Normally Open

Body size	Cv	In / cyl ports	Exhaust port	Voltage	2-way, 2-position normally closed	3-way, 2-position normally closed	3-way, 2-position normally open
1-1/4"	20.0 to 30.0	1"	1-1/4"	120VAC	**N3257904753**	**N3657904753**	**N3857904753**
		1-1/4"	1-1/2"	120VAC	**N3258904753**	**N3658904753**	**N3858904753**
		1-1/2"	1-1/2"	120VAC	**N3259904753**	**N3659904753**	**N3859904753**

Single Remote Pilot, 1/4" NPT remote pilot port with internal pilot return.

Normally Closed Normally Open

Body size	Cv	In / cyl ports	Exhaust port	2-way, 2-position normally closed	3-way, 2-position normally closed	3-way, 2-position normally open
3/8"	3.0 to 4.4	3/8"	1/2"	**N31431091**	**N35431091**	**N37431091**
		1/2"	1/2"	**N31441091**	**N35441091**	**N37441091**
3/4"	9.0 to 11.0	1/2"	3/4"	**N31451091**	**N35451091**	**N37451091**
		3/4"	1"	**N31461091**	**N35461091**	**N37461091**
		1"	1"	**N31471091**	**N35471091**	**N37471091**

Single Remote Pilot, 1/4" NPT remote pilot port with internal pilot return.

Normally Closed Normally Open

Body size	Cv	In / cyl ports	Exhaust port	2-way, 2-position normally closed	3-way, 2-position normally closed	3-way, 2-position normally open
1-1/4"	20.0 to 30.0	1"	1-1/4"	**N32471091**	**N36471091**	**N38471091**
		1-1/4"	1-1/2"	**N32481091**	**N36481091**	**N38481091**
		1-1/2"	1-1/2"	**N32491091**	**N36491091**	**N38491091**

Parker Hannifin Corporation
Pneumatic Division
Richland, Michigan
www.parker.com/pneumatics

"N" Series 3/8", 3/4" & 1-1/4" Body Sizes - Solenoid 'L' Pilot

N 315 3 9 0 45 53

Valve function - solenoid	
3/8" & 3/4" Body	
2-way, normally closed	315
3-way, normally closed	355
3-way, normally open	375
1-1/4" Body	
2-way, normally closed	325
3-way, normally closed	365
3-way, normally open	385

Port size / thread type	
3/8" Body size	
3/8" Inlet & cyl - 1/2" exhaust - NPT	3
1/2" inlet & cyl - 1/2" exhaust - NPT	4
1/2" inlet & cyl - 1/2" exhaust - BSPP	N
3/4" body size	
1/2" inlet & cyl - 3/4" exhaust - NPT	5
3/4" inlet & cyl - 1" exhaust - NPT	**6**
3/4" inlet & cyl - 1" exhaust - BSPP	Q
1" inlet & cyl - 1" exhaust - NPT	7
1-1/4"body size	
1" inlet & cyl - 1 1/4" exhaust - NPT	**7**
1-1/4" inlet & cyl – 1-1/2" exhaust - NPT	**8**
1-1/4" inlet & cyl – 1-1/2" exhaust - BSPP	S*
1-1/2" inlet & cyl – 1-1/2" exhaust - NPT	**9**
1-1/2" inlet & cyl – 1-1/2" exhaust - BSPP	T*

* Not available with valve function 325.

Note: BSPP is to the ISO 228 standard, and requires an R-BSPT male fitting.

Solenoid enclosure	
1	**Basic pilot**
2	Basic pilot NLMO
3	Basic pilot LMO
5	Junction box NLMO
6	Junction box LMO
8	**Junction box NLMO w/ light**
9	**Junction box LMO w/ light**
W	Basic pilot ext. LMO

Solenoid type	
0	**Standard**

"L" pilot configuration	
01*	External pilot, std service, 140 PSI
04*	External pilot, cont duty, 140 PSI
45	**Internal pilot, std service, 140 PSI**
48	**Internal pilot, cont duty, 140 PSI**

* Not available with valve function 325, 365, and 385 (1-1/4" body).

"L" pilot code						
	Voltage			Solenoid enclosure options		
Code	AC 60hz	AC 50hz	DC	Standard duty (01, 45)	Cont. duty (04, 48)	200 PSI (46)
49			**24**	**1, 2, 3, 5, 6, 8, 9, W**	**6, 8, 9**	**9**
53	**120**	**110**		**1, 2, 3, 5, 6, 8, 9, E, N, W**	**1, 6, 8, 9, N**	**8, 9, E**
57	240	220		1, 3, W		

"N" Series 1-1/4" Body Sizes - Solenoid Hi-Flow 'P' Pilot

N 365 8 9 0 47 53

Valve function - solenoid	
1-1/4" body	
2-Way, normally closed	325
3-Way, normally closed	365
3-Way, normally open	385

Port size / thread type	
1-1/4" body size	
1" inlet & cyl - 1 1/4" exhaust - NPT	**7**
1-1/4" inlet & cyl – 1-1/2" exhaust - NPT	**8**
1-1/4" inlet & cyl – 1-1/2" exhaust - BSPP	S
1-1/2" inlet & cyl – 1-1/2" exhaust - NPT	**9**
1-1/2" inlet & cyl – 1-1/2" exhaust - BSPP	T

Note: BSPP is to the ISO 228 standard, and requires an R-BSPT male fitting.

Solenoid enclosure	
5	Junction box NLMO
6	Junction box LMO
8	**Junction box NLMO w/ light**
9	**Junction box LMO w/ light**

Solenoid type	
0	**Standard**

"P" pilot configuration	
02	External pilot, std service, 125 PSI
47	**Internal pilot, std service, 125 PSI**

"P" pilot code				
	Voltage			Enclosure options
Code	AC 60hz	AC 50hz	DC	Standard duty
49			24	5, 6
53	**120**	**110**		**5, 6, 8, 9**

Parker Hannifin Corporation
Pneumatic Division
Richland, Michigan
www.parker.com/pneumatics

Replacement Pilots

Description	Standard L-pilot		Continuous duty L-pilot	
Override type	**Locking**	**Non-locking**	**Locking**	**Non-locking**
Basic with override	**K0653035****	**K0652035****	**K0853025****	**K0852025****
JIC with junction box & override	**K0656035****	**K0655035****	**K0856025****	**K0855025****
JIC pilot with junction box & override & indicator lights (120VAC only)	**K0659035****	**K0658035****	**K0859025****	**K0858025****

** Voltage code - (reference model index for availability)

Replacement Pilots

Description	Hazardous duty L-pilot		NEMA 4 L-pilot	
Hazardous duty L-pilot - UL & CSA	**K0451025****	N/A		
Override type	**Locking**	**Non-Locking**	**Locking**	**Non-Locking**
Hazardous duty with override	**K0453025****	**K0452025****		
NEMA 4 with override			**K2553025****	**K255202549**

** Voltage code - 49 & 53

Replacement Pilots

Description	Heavy duty P-Pilot		
Override type	**No override**	**Non-locking**	**Locking**
Basic with override	**K1351045****	N/A	N/A
JIC with junction box & override	N/A	**K1355045****	**K1356045****
JIC Pilot with junction box & override & indicator lights (120VAC only)	N/A	**K135804553**	**K135904553**

** Voltage code - 49 & 53

Coils for L-Pilot Operated Valves

Voltage Code **	Voltage 60Hz	50Hz	DC	Coil 19" Leads	72" Leads
40	12	—	—	K593007	—
41,42	24	—	6	K593003	—
45*	—	—	**12**	**K593010**	—
49*	—	—	**24 (Standard)**	**K593014**	—
79	—	—	24 (Arc Suppressed)	K593271	—
51*	—	—	48	—	K593185
53*	120	110	—	**K593025**	—
57*	240	240	—	**K593035**	—
60	240	220	—	**K593035**	—
61	—	—	**120**	**K593041**	—

* Indicates voltages approved for solenoid operators designed for use in hazardous locations.

Coils for P-Pilot Operated Valves

Voltage Code **	Voltage 60Hz	50Hz	DC	Coil 19" Leads	72" Leads
42	24	—	—	K593099	—
43	—	24	—	K593098	—
45	—	—	**12**	**K593094**	—
49	—	—	**24**	**K593097**	—
51	—	—	48	—	K593254
53	**115**	—	—	**K593108**	—
58	—	**230**	—	**K593111**	—

N □□□ □□ □□□ * *
Voltage Code

Parker Hannifin Corporation
Pneumatic Division
Richland, Michigan
www.parker.com/pneumatics

Internal Pilot - 3/8" & 3/4" Basic Body

Normally Closed

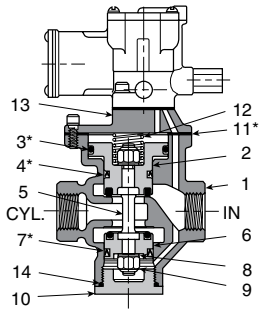

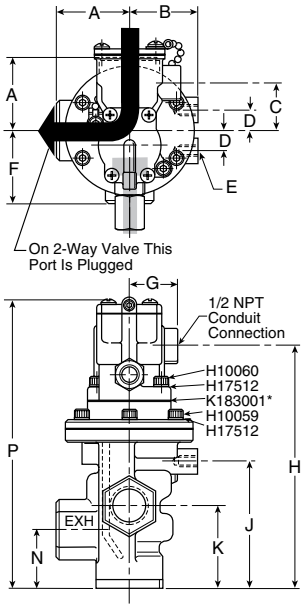

Normally Open

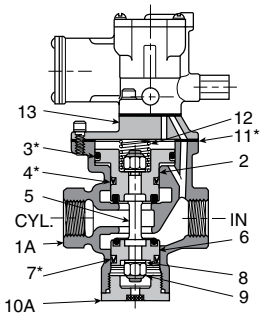

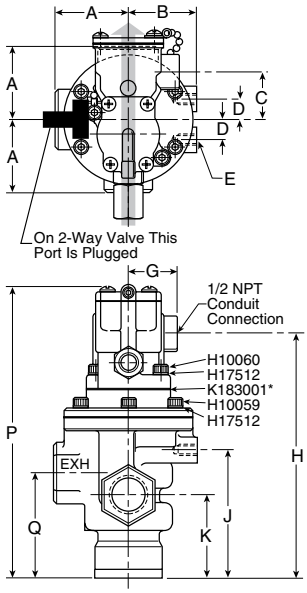

Exhaust
Pressure

Top view indicates flow through 3-Way valve with coil de-energized.

NOTE: For normal valve operation, override must be in "out" position.

Internal Pilot - 3/8" & 3/4" Basic Body

	3/8" Body		3/4" Body	
Key	**Inch**	**mm**	**Inch**	**mm**
A	1.56	40	2.13	54
B	1.50	38	1.94	49
C	1.81	46	1.34	34
D	.56	14	.56	14
E	3/8-16UNC 7/16" deep		3/8-16UNC 9/16" deep	
F	1.75	44	2.25	57
G	1.50	38	1.50	38
H	5.92	150	7.14	181
J	3.19	81	3.75	95
K	1.88	47	2.44	62
N	1.44	37	1.78	45
P	7.36	196	8.58	218
Q	2.31	59	3.09	84

Service Kits

Include all parts normally required for in-service maintenance:

3/8" Basic valve with standard service L-Pilots..... **K352076**

3/8" Basic valve with continuous duty L-Pilots..... **K352276**

3/4" Basic valve with standard service L-Pilots..... **K352077**

3/4" Basic valve with continuous duty L-Pilots..... **K352277**

Key	3/8" Valve	3/4" Valve	Description
1	—	1/2" Tap K053075	Body (N.C.)
	3/8" Tap K053022	3/4" Tap K053076	
	1/2" Tap K053023	1" Tap K053220	
1A	—	3/4" Tap K053077	Body (N.O.)
	3/8" Tap K053025	3/4" Tap K053078	
	1/2" Tap K053026	1" Tap K053218	
2	K212001	K212002	Upper piston assy
3*	H13648	H13728	Seal

Key	3/8" Valve	3/4" Valve	Description
4*	H14510	H13676	U-cup (3/8), o-ring (3/4)
5	K493002	K493009	Stem
6	K202001	K202002	Lower piston assy.
7*	H14509	H13676	U-cup (3/8), o-ring (3/4)
8	H17811	H17813	Washer (2)
9	H06326	H06332	Stop nut (2)
10	K103035	K103053	Bottom cap (N.C.)
10A	K092020	K092034	Bottom cap assy. (N.O.)
11*	K183049	K183057	Gasket
12	K473014	K473015	Spring
13	K563015	K563017	Adapter
14*	K41RB72121	K41RB72221	O-ring

* Parts included in seal kit

Parker Hannifin Corporation
Pneumatic Division
Richland, Michigan
www.parker.com/pneumatics

External Pilot - 3/8" & 3/4" Basic Body

Normally Closed

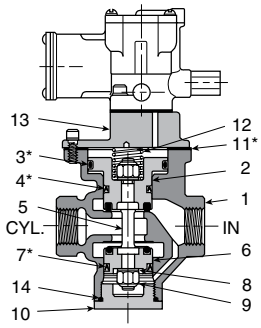

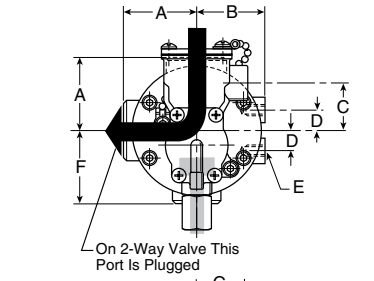

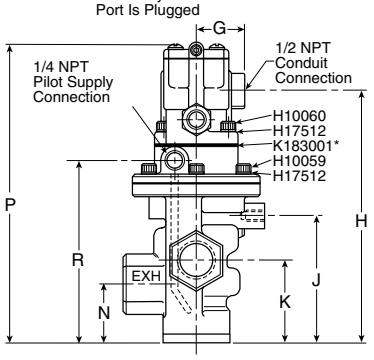

Normally Open

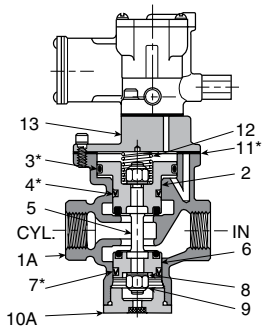

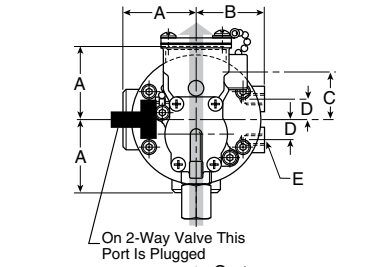

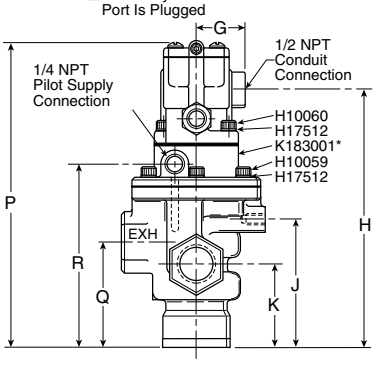

Exhaust
Pressure

Top view indicates flow through 3-Way valve with coil de-energized.

NOTE: For normal valve operation, override must be in "out" position.

External Pilot - 3/8" & 3/4" Basic Body

Key	3/8" Body		3/4" Body	
	Inch	mm	Inch	mm
A	1.56	40	2.13	54
B	1.50	38	1.94	49
C	1.81	46	1.34	34
D	.56	14	.56	14
E	3/8-16UNC 7/16" deep		3/8-16UNC 9/16" deep	
F	1.75	44	2.25	57
G	1.50	38	1.50	38
H	6.42	163	7.45	189
J	3.19	81	3.75	95
K	1.88	47	2.44	62
N	1.44	37	1.78	45
P	7.86	200	8.89	226
Q	2.31	59	3.09	84
R	4.34	110	5.38	137

Service Kits

Include all parts normally required for in-service maintenance:

3/8" Basic valve with standard service L-Pilots..... **K352076**

3/8" Basic valve with continuous duty L-Pilots..... **K352276**

3/4" Basic valve with standard service L-Pilots..... **K352077**

3/4" Basic valve with continuous duty L-Pilots..... **K352277**

Key	3/8" Valve	3/4" Valve	Description
1	—	1/2" Tap K053067	Body (N.C.)
	3/8" Tap K053019	3/4" Tap K053069	
	1/2" Tap K053157	1" Tap K053221	
1A	—	3/4" Tap K053065	Body (N.O.)
	3/8" Tap K053018	3/4" Tap K053070	
	1/2" Tap K053064	1" Tap K053219	
2	K212001	K212002	Upper piston assy
3*	H13648	H13728	Seal

Key	3/8" Valve	3/4" Valve	Description
4*	K41RB72211	H13676	O-ring
5	K493002	K493009	Stem
6	K202001	K202002	Lower piston assy.
7*	K41RB72210	H13676	O-ring
8	H17811	H17813	Washer (2)
9	H06326	H06332	Stop nut (2)
10	K103035	K103053	Bottom cap (N.C.)
10A	K092020	K092034	Bottom cap assy. (N.O.)
11	K473014	K473015	Spring
12*	K183049	K183057	Gasket
13	K563016	K563021	Adapter
14*	K41RB72121	K41RB72221	O-ring

* Parts included in seal kit

Parker Hannifin Corporation
Pneumatic Division
Richland, Michigan
www.parker.com/pneumatics

Internal Pilot - 1-1/4" Basic Body

Normally Closed

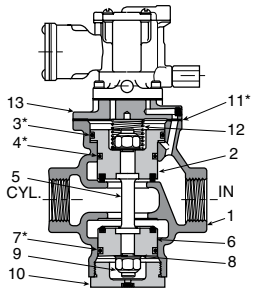

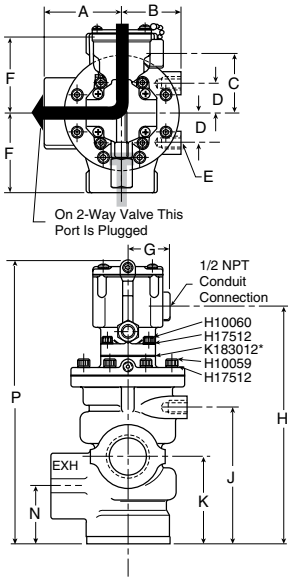

Normally Open

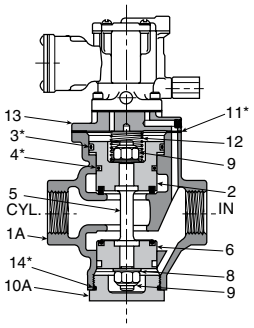

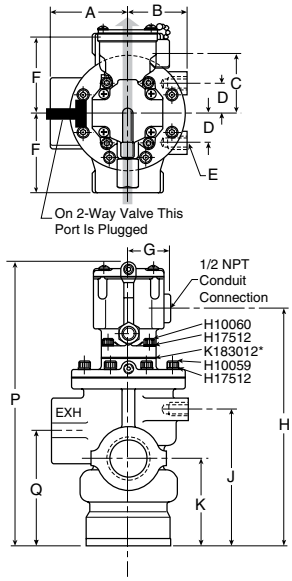

Exhaust
Pressure

Top view indicates flow through 3-Way valve with coil de-energized.

NOTE: For normal valve operation, override must be in "out" position.

Internal Pilot - 1-1/4" Basic Body

	1-14" Body	
Key	**Inch**	**mm**
A	3.00	76
B	2.25	57
C	1.34	34
D	1.19	30
E	1/2-13 UNC	3/4 Deep
F	3.13	80
G	1.50	38
H	9.30	236
J	5.34	136
K	3.44	87
N	2.31	59
P	11.14	283
Q	4.56	116

Service Kits

Include all parts normally required for in-service maintenance:

1-1/4" Basic valve with standard service P-Pilots..... **K352078**

Key	1-1/4" Valve	Description
1	1" Tap K053111	Body (N.C.)
	1-1/4" Tap K053112	
	1-1/2" Tap K053113	
1A	1" Tap K053114	Body (N.O.)
	1-1/4" Tap K053115	
	1-1/2" Tap K053116	
2	K313029	Upper piston assy
3*	H13752	O-ring

Key	1-1/4" Valve	Description
4*	H13728	Seal
5	K493016	Stem
6	K313028	Lower piston
7*	H13728	Seal
8	H17817	Washer
9	H06338	Stop nut
10	K092046	Bottom cap (N.C.)
10A	K103061	Bottom cap (N.O.)
11*	K183058	Gasket
12	K473016	Spring
13	K012003	Adapter
14*	K41RB72143	O-ring

* Parts included in seal kit

Parker Hannifin Corporation
Pneumatic Division
Richland, Michigan
www.parker.com/pneumatics

Continuous Duty Pilot - 1-1/4" Basic Body

Normally Closed

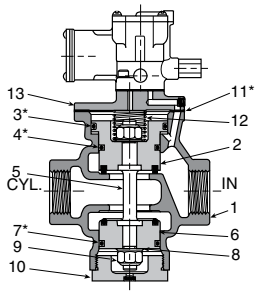

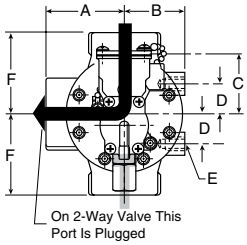

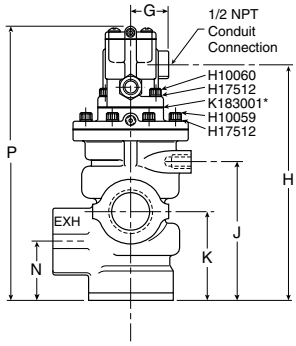

Normally Open

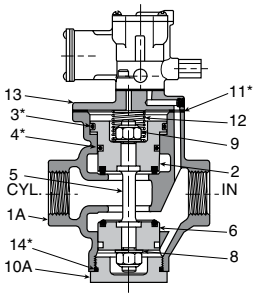

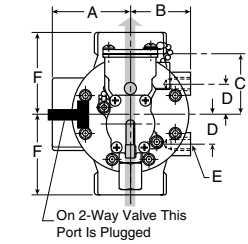

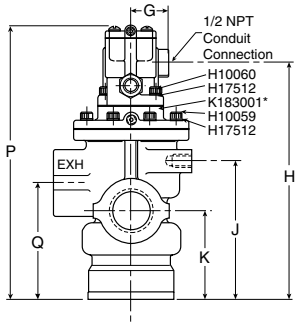

Exhaust
Pressure

Top view indicates flow through 3-Way valve with coil de-energized.

NOTE: For normal valve operation, override must be in "out" position.

Continuous Duty Pilot - 1-1/4" Basic Body

	1-1/4" Body	
Key	**Inch**	**mm**
A	3.00	76
B	2.25	57
C	1.34	34
D	1.19	30
E	1/2-13 UNC	3/4 Deep
F	3.13	80
G	1.50	38
H	9.02	229
J	5.34	136
K	3.44	87
N	2.31	59
P	10.45	265
Q	4.56	116

Service Kits

Include all parts normally required for in-service maintenance:

1-1/4" Basic valve with continuous duty L-Pilot **K352080**

Key	1-1/4" Valve	Description
1	1" Tap K053111	Body (N.C.)
	1-1/4" Tap K053112	
	1-1/2" Tap K053113	
1A	1" Tap K053114	Body (N.O.)
	1-1/4" Tap K053115	
	1-1/2" Tap K053116	
2	K313029	Upper piston assy
3*	H13752	O-Ring

Key	1-1/4" Valve	Description
4*	H13728	Seal
5	K493016	Stem
6	K313028	Lower piston
7*	H13728	Seal
8	H17817	Washer
9	H06338	Stop nut
10	K092046	Bottom cap (N.C.)
10A	K103061	Bottom cap (N.O.)
11*	K183058	Gasket
12	K473016	Spring
13	K012003	Adapter
14*	K41RB72143	O-ring

* Parts included in seal kit

Parker Hannifin Corporation
Pneumatic Division
Richland, Michigan
www.parker.com/pneumatics

Internal Return - 3/8", 3/4", 1-1/4" Basic Body

Normally Closed

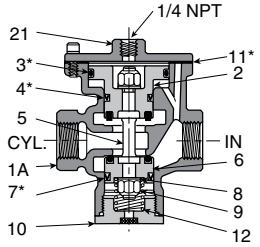

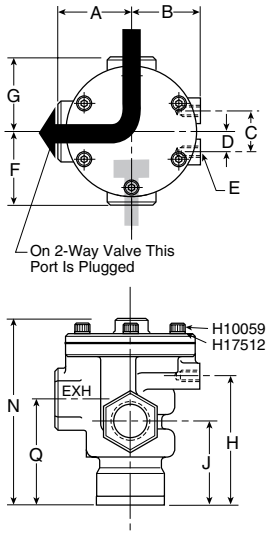

Normally Open

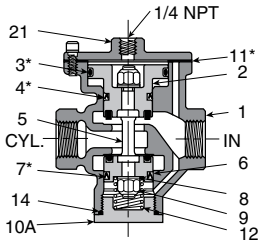

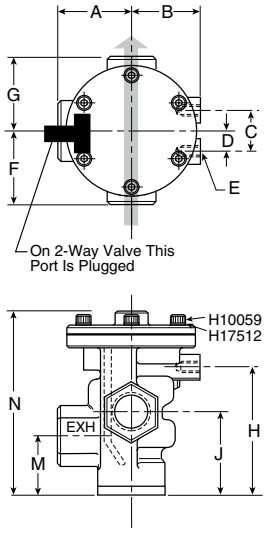

Exhaust
Pressure

Top view indicates flow through 3-Way valve.

NOTE: For normal valve operation, override must be in "out" position.

Internal Return - 3/8", 3/4", 1-1/4" Basic Body

Key	3/8" Body		3/4" Body		1-1/4" Body	
	Inch	mm	Inch	mm	Inch	mm
H	3.19	81	3.75	95	5.34	136
J	1.88	48	2.44	62	3.44	87
M	1.44	37	1.78	45	2.66	67
N	4.22	107	5.31	135	7.19	183
Q	2.31	59	3.09	78	4.56	116

Service Kits

Include all parts normally required for in-service maintenance:

3/8" Basic valve..... **K352073**
3/4" Basic valve.....**K352074**
1-1/4" Basic valve **K352075**

Key	3/8" Valve	3/4" Valve	1-1/4" Valve	Description
1	—	1/2" Tap K053075	1" Tap K053111	Body (N.O.)
	3/8" Tap K053022	3/4" Tap K053076	1-1/4" Tap K053112	
	1/2" Tap K053023	1" Tap K053220	1-1/2" Tap K053113	
1A	—	1/2" Tap K053077	1" Tap K053114	Body (N.C.)
	3/8" Tap K053025	3/4" Tap K053078	1-1/4" Tap K053115	
	1/2" Tap K053026	1" Tap K053218	1-1/2" Tap K053116	
2	K212001	K212002	K313029	Upper piston assy
3*	H13648	H13728	H13752	Seal
4*	H14510	H13676	H13728	Seal

Key	3/8" Valve	3/4" Valve	1-1/4" Valve	Description
5	K493002	K493009	K493016	Stem
6	K202001	K202002	K313028	Lower piston assy.
7*	H13499	H13676	H13728	Seal
8	H17811	H17813	H17817	Washer (2)
9	H06326	H06332	H06338	Stop nut (2)
10	K092020	K092034	K092046	Bottom cap (N.C.)
10A	K103035	K103053	K103061	Bottom cap (N.O.)
11*	K183049	K183057	K183058	Gasket
12	K473014	K473015	K473016	Spring
14*	K41RB72121	K41RB72221	K41RB72143	O-ring
21	K123018	K123021	K123024	Cover

* Parts included in seal kit

Parker Hannifin Corporation
Pneumatic Division
Richland, Michigan
www.parker.com/pneumatics

External Return - 3/8", 3/4", 1-1/4" Basic Body

Normally Closed

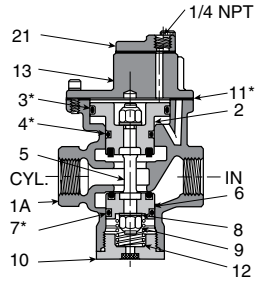

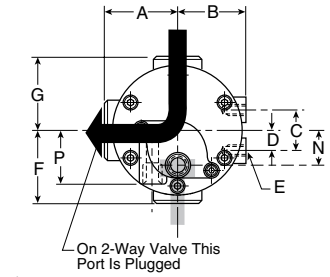

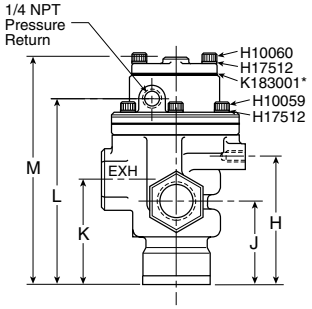

Normally Open

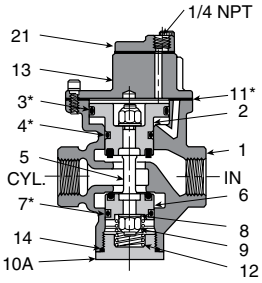

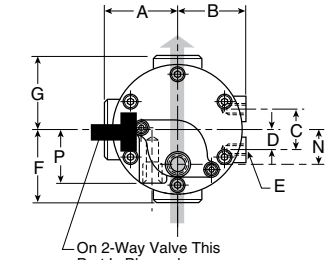

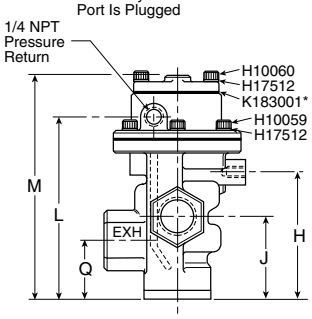

Exhaust
Pressure

Top view indicates flow through 3-Way valve.

NOTE: For normal valve operation, override must be in "out" position.

Internal Return - 3/8", 3/4", 1-1/4" Basic Body

Key	3/8" Body		3/4" Body		1-1/4" Body	
	Inch	mm	Inch	mm	Inch	mm
A	1.56	40	2.13	54	3.00	76
B	1.50	38	1.94	49	2.25	57
C	1.13	29	1.13	29	2.38	60
D	.56	14	.56	14	1.19	30
E	3/8–16UNC 7/16" deep		3/8– 16UNC 9/16" deep		1/2–13UNC 3/4" deep	
F	1.75	44	2.25	57	3.13	79
G	1.56	40	2.13	54	3.13	79
H	3.19	81	3.75	95	5.34	136
J	1.88	48	2.44	62	3.44	87
K	2.31	59	3.09	78	4.56	116
L	4.34	110	5.38	137	7.31	186
M	5.31	135	6.34	161	7.88	200
N	Left of center				On center	
	.53	13	1.00	25		
Q	1.44	37	1.78	45	2.31	59

Service Kits

Include all parts normally required for in-service maintenance:

3/8" Basic valve..... **K352031**

3/4" Basic valve..... **K352056**

1-1/4" Basic valve **K352083**

Key	3/8" Valve	3/4" Valve	1-1/4" Valve	Description
1	1/4" Tap K053011	1/2" Tap K053067	1" Tap K053143	Body (N.O.)
	—	3/4" Tap K053069	1-1/4" Tap K053110	
	1/2" Tap K053157	1" Tap K053221	1-1/2" Tap K053146	
1A	1/4" Tap K053010	1/2" Tap K053065	1" Tap K053159	Body (N.C.)
	—	3/4" Tap K053070	1-1/4" Tap K053144	
	1/2" Tap K053064	1" Tap K053 219	1-1/2" Tap K053145	
2	K212001	K212002	K313029	Upper piston assy
3*	H13648	H13728	H13752	Seal
4*	H13529	H13676	H13728	Seal

Key	3/8" Valve	3/4" Valve	1-1/4" Valve	Description
5	K493002	K493009	K493016	Stem
6	K202001	K202002	K313028	Lower piston assy.
7*	H13499	H13676	H13728	Seal
8	H17811	H17813	H17817	Washer (2)
9	H06326	H06332	H06338	Stop nut (2)
10	K092020	K092034	K092046	Bottom cap assy. (N.C.)
10A	K103035	K103053	K103061	Bottom cap (N.O.)
11*	K183049	K183057	K183058	Gasket
12	K473014	K473015	K473016	Spring
13	K563016	K563021	K563027	Adapter
14*	K41RB72121	K41RB72221	K41RB72143	O-ring
21	K323027	K323027	Not used	Cover

* Parts included in seal kit

Parker Hannifin Corporation
Pneumatic Division
Richland, Michigan
www.parker.com/pneumatics

Internal Return - 3/8" & 3/4" Basic Body

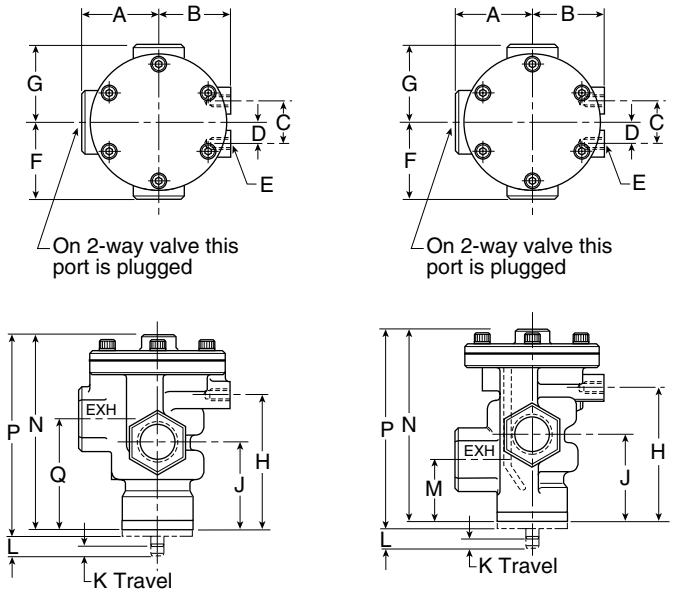

Internal Return - 3/8" & 3/4" Basic Body

Key	3/8" Body		3/4" Body		1-1/4" Body	
	Inch	mm	Inch	mm	Inch	mm
A	1.56	40	2.13	54	3.00	76
B	1.50	38	1.94	49	2.25	57
C	1.13	29	1.13	29	2.38	60
D	.56	14	.56	14	1.19	30
E	3/8–16UNC 7/16" deep		3/8–16UNC 9/16" deep		1/2–13UNC 3/4" deep	
F	1.75	44	2.25	57	3.13	79
G	1.56	40	2.13	54	3.13	79
H	3.19	81	3.75	95	5.34	136
J	1.88	48	2.44	62	3.44	87
K	.50	13	.50	13	.50	13
L	.11	3	.16	4	.25	6
M	1.44	37	1.78	45	2.66	67
N	4.22	107	5.31	135	7.19	183
P	4.78	121	5.56	141	7.53	191
Q	2.31	59	3.09	78	4.56	116

External Return - 3/8" & 3/4" Basic Body

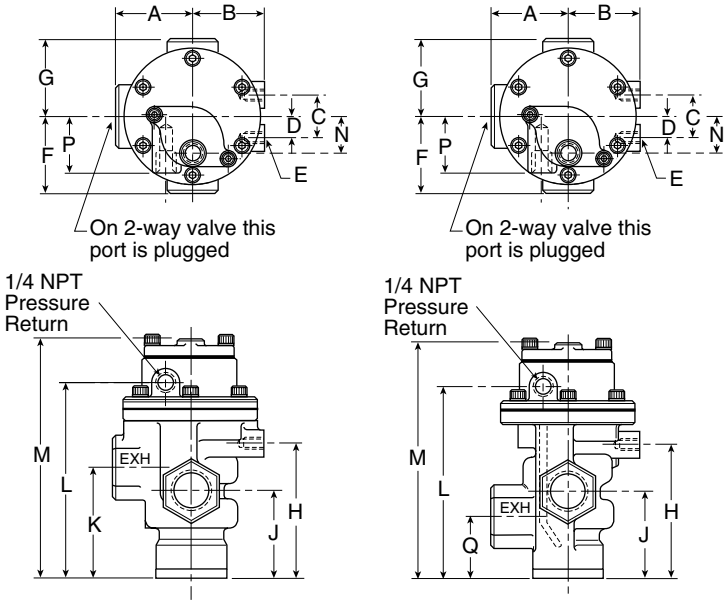

Internal Return - 3/8" & 3/4" Basic Body

Key	3/8" Body		3/4" Body		1-1/4" Body	
	Inch	mm	Inch	mm	Inch	mm
A	1.56	40	2.13	54	3.00	76
B	1.50	38	1.94	49	2.25	57
C	1.13	29	1.13	29	2.38	60
D	.56	14	.56	14	1.19	30
E	3/8–16UNC 7/16" deep		3/8–16UNC 9/16" deep		1/2–13UNC 3/4" deep	
F	1.75	44	2.25	57	3.13	79
G	1.56	40	2.13	54	3.13	79
H	3.19	81	3.75	95	5.34	136
J	1.88	48	2.44	62	3.44	87
K	2.31	59	3.09	78	4.56	116
L	4.34	110	5.38	137	7.31	186
M	5.31	135	6.34	161	7.88	200
N	Left of center				On center	
	.53	13	1.00	25		
Q	1.44	37	1.78	45	2.31	59

Parker Hannifin Corporation
Pneumatic Division
Richland, Michigan
www.parker.com/pneumatics