Pressure Gauges

Industrial and Process

PGI Series

- 40, 50, 63, 100, 115, and 160 mm (1 1/2, 2, 2 1/2, 4, 4 1/2 and 6 in.) dial sizes
- Accuracy in accordance with ASME, EN, and JIS
- Available with a variety of end connections, including Swagelok® tube adapters
- Center-back, lower-back, and lower mount configurations
- Stainless steel and reinforced thermoplastic construction
- Available unfilled or liquid filled

Contents

Features 2

Testing and Calibration 2

Swagelok Tube Adapters Solve Alignment Problems 2

Process Connections 3

Model Selection Guide 3

Industrial Gauge Models
Stainless Steel Cases and Wetted Components

B Model: General-Purpose Gauge 4

C Model: General-Purpose Gauge 6

F Model: General-Purpose Gauge 8

S Model: Solid-Front Safety Gauge 10

M Model: Miniature Gauge 12

L Model: Low-Pressure Gauge 14

Process Gauge Model
Glass-Reinforced Thermoplastic Case and Stainless Steel, Brass, or Alloy 400 Wetted Components

P Model: Industrial Process Gauge 16

A Model: Refrigeration Ammonia Gauge, Stainless Steel 18

Dial Range Designators 20

Options and Accessories 23

Features

- Monitor vacuum and positive system pressures up to 15 000 psi, 1000 bar, or 100 MPa
- Manufactured in accordance with industry standards
- Available with Swagelok tube adapter end connections

Testing and Calibration

Every Swagelok industrial pressure gauge is factory calibrated and pressure tested.

Swagelok Tube Adapters Solve Alignment Problems

Swagelok tube adapters can help eliminate difficult alignment problems and can be used with any Swagelok tube fitting.

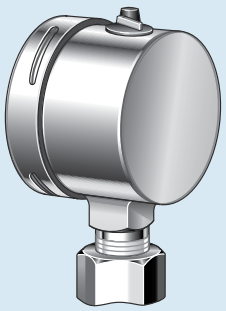

Typical Alignment Problem

When installing a gauge with a pipe fitting end connection, it is often difficult to align the dial to the desired position without damaging the gauge.

Swagelok Tube Adapters

Gauges with integral Swagelok tube adapters eliminate alignment problems.

Installation Instructions

1. Insert the gauge with integral Swagelok tube adapter into a Swagelok tube fitting.
2. Align the gauge dial to the desired position.
3. Install the fitting.

⚠ **Swagelok tube adapters are to be used ONLY in Swagelok tube fittings. Use in fittings made by other manufacturers may result in leakage or slippage.**

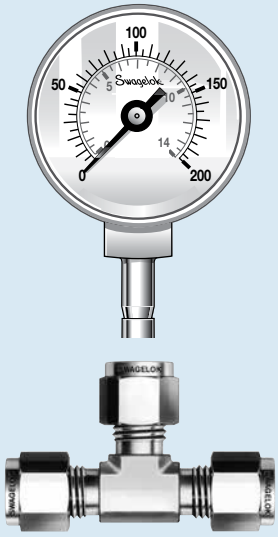

Process Connections

Connection	Maximum Pressure	Specification
Swagelok Tube Adapter		
1/4 in. and 6 mm	10 000 psi, 600 bar, 60 MPa	—
3/8 in. and 10 mm	7500 psi, 500 bar, 50 MPa	
1/2 in. and 12 mm	6000 psi, 400 bar, 40 MPa	
Male NPT		
1/8 in.	6000 psi, 400 bar, 40 MPa	ASME B1.20.1
1/4 and 1/2 in.	15 000 psi, 1000 bar, 100 MPa	
Male ISO Parallel Gauge Thread (EN)		
G1/8B (EN)	6000 psi, 400 bar, 40 MPa	EN 837-1 EN 837-3
G1/4B (EN) G1/2B (EN)	15 000 psi, 1000 bar, 100 MPa	
Male ISO Parallel Gauge Thread (JIS)		
G1/4B (PF) G1/2B (PF)	15 000 psi, 1000 bar, 100 MPa	JIS B7505
Male ISO Tapered Thread		
R1/8 (PT)	6000 psi, 400 bar, 40 MPa	ISO 7/1 JIS B0203
R1/4 (PT) R1/2 (PT)	15 000 psi, 1000 bar, 100 MPa	
Male SAE Parallel Thread		
SAE-4 7/16-20	10 000 psi	SAE J1926-1 ISO 11296-1

G1/8B (EN), G1/4B (EN), and G1/2B (EN) are for use with Swagelok **RG** adapter fittings.

G1/8B (PF), G1/4B (PF), and G1/2B (PF) are for use with Swagelok **RJ** adapter fittings.

Model Selection Guide

Dial Range	Dial Size mm (in.)	Accuracy	Adjustable Pointer	Solid Front	Liquid Fillable	Configurations① LBM	CBM	LM	Model
Positive pressures: 0 to 10 psi, 400 mbar, or 50 kPa	63 (2 1/2)	± 1.5 % of span ASME B40.100 Grade B, EN 837-3 Class 1.6, JIS B7505 Class 1.6	—	—	—	—	—	Yes	L
	100 (4)		—	—	—	Yes	—	Yes	
Compound pressures: Vacuum to 200 psi, 9 bar, or 1.5 MPa Positive pressures: 0 to 10 000 psi, 600 bar, or 60 MPa	40 (1 1/2)	± 2.5 % of span ASME B40.100 Grade C, EN 837-1 Class 2.5, JIS B7505 Class 2.5	—	—	—	—	Yes	Yes	M
	50 (2)								
Compound pressures: Vacuum to 200 psi, 9 bar, or 1.5 MPa Positive pressures: 0 to 15 000 psi, 1000 bar, or 100 MPa	63 (2 1/2)	± 1.5 % of span ASME B40.100 Grade B, EN 837-1 Class 1.6, JIS B7505 Class 1.6	Yes	Yes	Yes②	Yes	—	Yes	S
			Yes	—	Yes	—	Yes	Yes	B, F
			—	—	Yes	—	Yes	Yes	C
	100 (4)	± 1 % of span ASME B40.100 Grade 1A, EN 837-1 Class 1.0 JIS B7505 Class 1.0	Yes	Yes	Yes②	Yes	—	Yes	S
			Yes	—	Yes	Yes	—	Yes	B, F
			—	—	Yes	Yes	—	Yes	C
	160 (6)		Yes	—	Yes	Yes	—	Yes	B
Compound pressures: Vacuum to 400 psi, 9 bar, 1.5 MPa, or 2500 kPa	115 (4 1/2)	± 0.5 % of span ASME B40.100 Grade 2A	Yes	Yes	Yes	Yes	—	Yes	P
Positive pressures: 0 to 15 000 psi, 1000 bar, 100 MPa, or 100 000 kPa	160 (6)		Yes	Yes	Yes	Yes	—	Yes	P

① Configurations: **LBM** = lower-back mount
CBM = center-back mount
LM = lower mount.

② Liquid-fillable model available in lower mount configuration only.

⚠ **Glycerin- and silicone-filled gauges cannot be used where strong oxidizing agents are present.**

B Model: General-Purpose Stainless Steel Gauge

Features

- 63, 100, and 160 mm (2 1/2, 4, and 6 in.) dial sizes are available.
- Bayonet ring allows easy access to pointer.
- Lens is constructed of polycarbonate for additional protection.
- Design is liquid fillable.

Technical Data

Dial Ranges

Compound Gauges

- Vacuum to 0 psi through vacuum to 200 psi
- Vacuum to 0 bar through vacuum to 9 bar
- Vacuum to 0 MPa through vacuum to 1.5 MPa

Positive-Pressure Gauges

- 0 to 15 psi through 0 to 15 000 psi
- 0 to 1 bar through 0 to 1000 bar
- 0 to 0.1 MPa through 0 to 100 MPa

Accuracy

- 63 mm (2 1/2 in.): ± 1.5 % of span (ASME B40.100 Grade B, EN 837-1 Class 1.6, JIS B7505 Class 1.6)
- 100 and 160 mm (4 and 6 in.): ± 1.0 % of span (ASME B40.100 Grade 1A, EN 837-1 Class 1.0, JIS B7505 Class 1.0)

Configurations

- 63 mm (2 1/2 in.): center-back and lower mount
- 100 and 160 mm (4 and 6 in.): lower-back and lower mount

End Connections

63 mm (2 1/2 in.) Dial Size

- 1/4 and 3/8 in.; 6 and 10 mm Swagelok tube adapter
- 1/4 in. male NPT
- G1/4B (EN)
- G1/4B (PF)
- R1/4 (PT)

100 mm (4 in.) Dial Size

- 1/2 in. and 12 mm Swagelok tube adapter
- 1/4 and 1/2 in. male NPT
- G1/2B (EN)
- G1/2B (PF)
- R1/2 (PT)

160 mm (6 in.) Dial Size

- 1/2 in. male NPT
- G1/2B (EN)
- G1/2B (PF)
- R1/2 (PT)

Weather Protection

- Weather-tight (NEMA 4X/IP65)

Operating Temperature

Ambient

- Unfilled: –40 to 140°F (–40 to 60°C)
- Glycerin-filled: –4 to 140°F (–20 to 60°C)
- Low-temperature glycerin-filled: –29-to 140°F (–34 to 60°C)
- Silicone-filled: –40 to 140°F (–40 to 60°C)

Media

- Unfilled: 392°F (200°C) maximum
- Liquid-filled: 212°F (100°C) maximum

Temperature Error

± 0.4 % for every 18°F (10°C) temperature change from 68°F (20°C)

Materials of Construction

Component	Material
End connection	*316 SS*
Bourdon tube	
Case	304 SS
Fill fluid (if ordered)	Glycerin, low-temperature glycerin, or silicone
Movement	Stainless steel
Lens	Polycarbonate
Lens gasket	Buna N
Dial	Aluminum
Pointer	

Wetted components listed in *italics*.

See page 23 for options and accessories for field installation.

Dimensions

Dimensions are for reference only and are subject to change.

Lower Mount

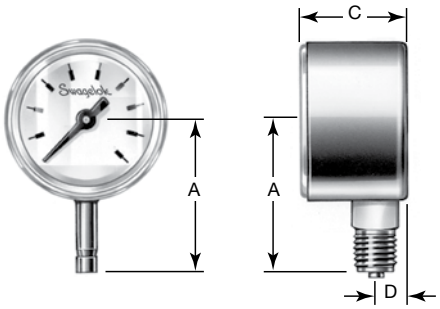

Center-Back Mount

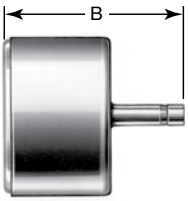

Lower-Back Mount

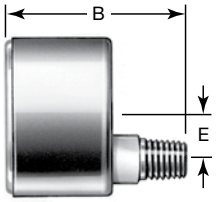

Dial Size mm (in.)	End Connection Size	End Connection Type	Dimensions, in. (mm) A	B	C	D	E
63 (2 1/2)	1/4 in.	Swagelok tube adapter	2.26 (57.3)	2.39 (60.8)	1.30 (33.0)	0.39 (10.0)	—
		Male NPT	2.09 (53.0)	2.24 (57.0)			
		G1/4B (EN)					
		G1/4B (PF)					
		R1/4 (PT)					
	3/8 in.	Swagelok tube adapter	2.31 (58.8)	2.45 (62.3)			
	6 mm		2.26 (57.3)	2.39 (60.8)			
	10 mm		2.31 (58.8)	2.45 (62.3)			
100 (4)	1/4 in.	Male NPT	3.15 (80.0)	3.27 (83.0)	1.97 (50.0)	0.63 (16.0)	1.18 (30.0)
	1/2 in.	Swagelok tube adapter	3.60 (91.4)	3.44 (87.4)			
		Male NPT	3.43 (87.0)	3.27 (83.0)			
		G1/2B (EN)					
		G1/2B (PF)					
		R1/2 (PT)					
	12 mm	Swagelok tube adapter	3.60 (91.4)	3.44 (87.4)			
160 (6)	1/2 in.	Male NPT	4.65 (118)	3.27 (83.0)①	1.97 (50.0)①		1.97 (50.0)
		G1/2B (EN)					
		G1/2B (PF)					
		R1/2 (PT)					

① **B** is 3.90 in. (99.0 mm) and **C** is 2.60 in. (66.0 mm) for gauges with lower-back mount and pressure ratings of 1500 psi, 10 MPa, 100 bar or higher.

Ordering Information

Build a B model gauge ordering number by combining the designators as shown below. **List option designators *alphabetically.***

PGI - 63B - PG100 - L AQ X - ABJ

Product Function and Type
Pressure gauge, industrial

Dial Size and Model
63B = 63 mm (2 1/2 in.) dial
100B = 100 mm (4 in.) dial
160B = 160 mm (6 in.) dial

Dial Range
See page 20 and 21.

Process Connection Location
L = Lower mount (all dial sizes)
C = Center-back mount (63 mm [2 1/2 in.] dial size only)
B = Lower-back mount (100 and 160 mm [4 and 6 in.] dial sizes only)

Fitting Size and Type

63 mm (2 1/2 in.) Dial Size
AQ = 1/4 in. Swagelok tube adapter
BG = 3/8 in. Swagelok tube adapter
AS = 6 mm Swagelok tube adapter
BH = 10 mm Swagelok tube adapter
AO = 1/4 in. male NPT
AV = G1/4B (EN)
AX = G1/4B (PF)
BD = R1/4 (PT)

100 mm (4 in.) Dial Size
AR = 1/2 in. Swagelok tube adapter
AT = 12 mm Swagelok tube adapter
AO = 1/4 in. male NPT
AP = 1/2 in. male NPT
AW = G1/2B (EN)
AZ = G1/2B (PF)
BE = R1/2 (PT)

160 mm (6 in.) Dial Size
AP = 1/2 in. male NPT
AW = G1/2B (EN)
AZ = G1/2B (PF)
BE = R1/2 (PT)

Liquid Fill Fluid (see page 23)
X = Unfilled
1 = Glycerin
2 = Low-temperature glycerin
3 = Silicone

Options (see page 23)
A = ASME B40.100 level IV cleaning①
B = Certificate of calibration
E = Material certification
F = Panel-mount clamp②
G = Front flange②
H = Rear flange
I = Maximum indicating pointer③
J = Adjustable pointer④
K = Safety glass
N = Orifice (0.023 in. [0.58 mm])

① Available for unfilled gauges only.
② Not available in lower mount gauge configuration. Not available with maximum indicator pointer.
③ Not available with adjustable pointer; not available with dial range maximums lower than 54 psi (3.7 bar, 0.37 MPa). Not available with front flange.
④ Not available with maximum indicating pointer.

C Model: General-Purpose Stainless Steel Gauge

Features

- 63 and 100 mm (2 1/2 and 4 in.) dial sizes are available.
- Crimped ring provides a permanent seal of gauge case to lens.
- Lens is constructed of clear polycarbonate.
- Design is liquid fillable.

Technical Data

Dial Ranges

Compound Gauges

- Vacuum to 0 psi through vacuum to 200 psi
- Vacuum to 0 bar through vacuum to 9 bar
- Vacuum to 0 MPa through vacuum to 1.5 MPa

Positive-Pressure Gauges

- 0 to 15 psi through 0 to 15 000 psi
- 0 to 1 bar through 0 to 1000 bar
- 0 to 0.1 MPa through 0 to 100 MPa

Accuracy

- 63 mm (2 1/2 in.): ± 1.5 % of span (ASME B40.100 Grade B, EN 837-1 Class 1.6, JIS B7505 Class 1.6)
- 100 mm (4 in.): ± 1.0 % of span (ASME B40.100 Grade 1A, EN 837-1 Class 1.0, JIS B7505 Class 1.0)

Configurations

- 63 mm (2 1/2 in.): center-back and lower mount
- 100 mm (4 in.): lower-back and lower mount

End Connections

63 mm (2 1/2 in.) Dial Size

- 1/4 and 3/8 in.; 6 and 10 mm Swagelok tube adapter
- 1/4 in. male NPT

100 mm (4 in.) Dial Size

- 1/2 in. and 12 mm Swagelok tube adapter
- 1/4 and 1/2 in. male NPT

Weather Protection

- Weather-tight (NEMA 4X/IP65)

Operating Temperature

Ambient

- Unfilled: –40 to 140°F (–40 to 60°C)
- Glycerin-filled: –4 to 140°F (–20 to 60°C)
- Low-temperature glycerin-filled: –29-to 140°F (–34 to 60°C)
- Silicone-filled: –40 to 140°F (–40 to 60°C)

Media

212°F (100°C) maximum

Temperature Error

± 0.4 % for every 18°F (10°C) temperature change from 68°F (20°C)

Materials of Construction

Component	Material
End connection	*316 SS*
Bourdon tube	
Case	304 SS
Fill fluid (if ordered)	Glycerin, low-temperature glycerin, or silicone
Movement	Stainless steel
Lens	Polycarbonate
Lens gasket	Buna N
Dial	Aluminum
Pointer	

Wetted components listed in *italics*.

See page 23 for options and accessories for field installation.

Dimensions

Dimensions are for reference only and are subject to change.

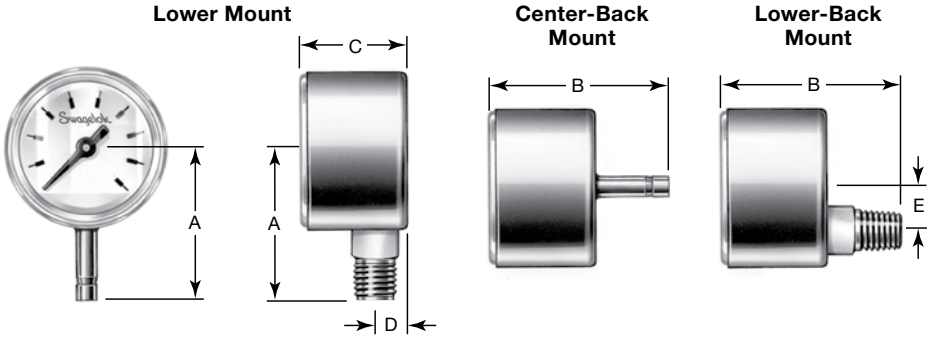

Dial Size mm (in.)	End Connection		Dimensions, in. (mm)				
	Size	Type	A	B	C	D	E
63 (2 1/2)	1/4 in.	Swagelok tube adapter	2.22 (56.3)	2.37 (60.3)	1.30 (33.0)①	0.39 (10.0)	—
		Male NPT	2.09 (53.0)	2.24 (57.0)			
	3/8 in.	Swagelok tube adapter	2.28 (57.8)	2.43 (61.8)			
	6 mm		2.22 (56.3)	2.37 (60.3)			
	10 mm		2.28 (57.8)	2.43 (61.8)			
100 (4)	1/4 in.	Male NPT	3.15 (80.0)	3.27 (83.0)	1.97 (50.0)	0.63 (16.0)	1.18 (30.0)
	1/2 in.	Swagelok tube adapter	3.64 (92.4)	3.48 (88.4)			
		Male NPT	3.43 (87.0)	3.27 (83.0)			
	12 mm	Swagelok tube adapter	3.64 (92.4)	3.48 (88.4)			

① 1.10 (28.0) for center-back mount.

Ordering Information

Build a C model gauge ordering number by combining the designators as shown below. **List option designators *alphabetically.***

PGI - 63C - PG100 - L AQ X - ABH

Product Function and Type
Pressure gauge, industrial

Dial Size and Model
63C = 63 mm (2 1/2 in.) dial
100C = 100 mm (4 in.) dial

Dial Range
See page 20 and 21.

Process Connection Location
L = Lower mount (all dial sizes)
C = Center-back mount (63 mm [2 1/2 in.] dial size only)
B = Lower-back mount (100 mm [4 in.] dial size only)

Fitting Size and Type

63 mm (2 1/2 in.) Dial Size
AQ = 1/4 in. Swagelok tube adapter
BG = 3/8 in. Swagelok tube adapter
AS = 6 mm Swagelok tube adapter
BH = 10 mm Swagelok tube adapter
AO = 1/4 in. male NPT

100 mm (4 in.) Dial Size
AR = 1/2 in. Swagelok tube adapter
AT = 12 mm Swagelok tube adapter
AO = 1/4 in. male NPT
AP = 1/2 in. male NPT

Options (see page 23)
A = ASME B40.100 level IV cleaning①
B = Certificate of calibration
E = Material certification
F = Panel-mount clamp②
G = Front flange②
H = Rear flange
I = Maximum indicating pointer③
N = Orifice (0.023 in. [0.58 mm])
9320 = White
9321 = Orange
9322 = Green
9323 = Glow

① Available for unfilled gauges only.
② Not available in lower mount gauge configuration.
③ Not available with dial range maximums lower than 54 psi (3.7 bar, 0.37 MPa).

Liquid Fill Fluid (see page 23)
X = Unfilled
1 = Glycerin
2 = Low-temperature glycerin
3 = Silicone

F Model: General-Purpose Stainless Steel Gauge

Features

- 63 and 100 mm (2 1/2 and 4 in.) dial sizes are available
- Crimped ring provides a permanent seal of gauge case to lens.
- Lens is constructed of polycarbonate for additional protection.
- Design is liquid fillable.

Technical Data

Dial Ranges

Compound Gauges

- Vacuum to 0 psi through vacuum to 300 psi
- Vacuum to 0 bar through vacuum to 9 bar
- Vacuum to 0 MPa through vacuum to 0.9 MPa

Positive-Pressure Gauges

- 0 to 15 psi through 0 to 20 000 psi
- 0 to 1 bar through 0 to 1000 bar
- 0 to 0.1 MPa through 0 to 100 MPa

Accuracy

- 63 mm (2 1/2 in.): ± 1.6 % of span (ASME B40.100 Grade B, EN 837-1 Class 1.6, JIS B7505 Class 1.6)
- 100 mm (4 in.): ± 1.0 % of span (ASME B40.100 Grade 1A, EN 837-1 Class 1.0, JIS B7505 Class 1.0)

Configurations

- 63 and 100 mm (2 1/2 and 4 in.): center-back, lower-back, and lower mount

End Connections

63 mm (2 1/2 in.) Dial Size

- 1/8 and 1/4 in. male NPT
- G1/4B (EN)
- R1/4 (PT)
- SAE-4 7/16-20

100 mm (4 in.) Dial Size

- 1/4 and 1/2 in. male NPT
- G1/2B (EN)
- R1/2 (PT)

Weather Protection

- Weather-tight (NEMA 4X/IP65)

Operating Temperature

Ambient

- Unfilled: –40 to 200°F (–40 to 93°C)
- Glycerin-filled: 20 to 158°F (–7 to 70°C)
- Silicone-filled: –40-to 158°F (–40 to 70°C)

Media

- Unfilled: 250°F (121°C) maximum
- Liquid-filled: 212°F (100°C) maximum

Temperature Error

± 0.04 % 18°F (10°C) temperature change from 68°F (20°C)

Materials of Construction

Component	Material
End connection	*316 SS*
Bourdon tube	
Case	304 SS or 316 SS
Fill fluid (if ordered)	Glycerin or silicone
Movement	Stainless steel
Lens	Polycarbonate, Glass or Safety Glass
Lens gasket	Buna N
Dial	Aluminum
Pointer	

Wetted components listed in *italics*.

See page 23 for options and accessories for field installation.

Dimensions

Dimensions are for reference only and are subject to change.

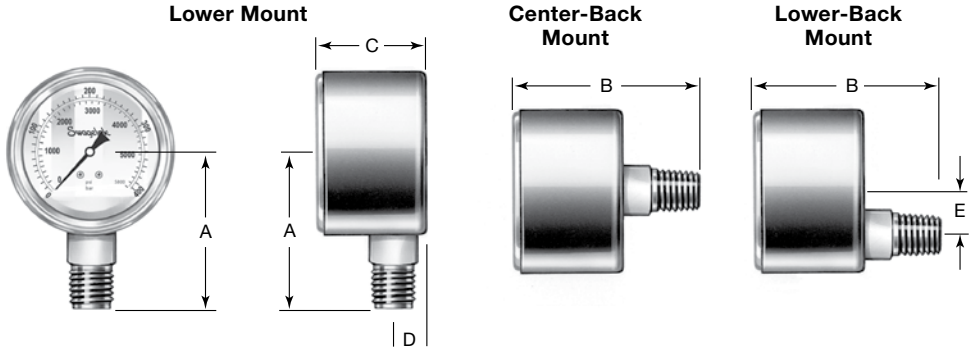

Dial Size mm (in.)	End Connection		Dimensions, in. (mm)				
	Size	Type	A	B	C	D	E
63 (2 1/2)	1/8 in.	Male NPT	2.33 (59.2)	2.36 (60.0)	1.26 (32.0)	0.42 (10.6)	0.80 (20.3)
	1/4 in.	Male NPT	2.46 (62.6)	2.50 (63.4)			
		G1/4B		2.49 (63.3)			
		R1/4 (PT)	2.38 (60.5)	2.42 (61.4)			
		SAE-4 7/16-20	2.58 (65.5)	2.60 (66.0)			
100 (4)	1/4 in.	Male NPT	3.44 (87.2)	3.13 (79.5)	1.61 (40.9)	0.73 (18.5)	0.80 (20.3)
	1/2 in.	Male NPT	3.48 (88.5)				
		G1/2B	3.60 (91.4)	3.26 (82.8)			
		R1/2 (PT)	3.48 (88.5)	3.14 (79.8)			

Ordering Information

Build a F model gauge ordering number by combining the designators as shown below. **List option designators *alphabetically.***

PGI - 63F - PG100 - L AO X - BEK

Product Function and Type
Pressure gauge, industrial

Dial Size and Model
63F = 63 mm (2 1/2 in.) dial
100F = 100 mm (4 in.) dial

Dial Range
See page 20 and 21.

Process Connection Location
L = Lower mount (all dial sizes)
C = Center-back mount (all dial sizes)
B = Lower-back mount (all dial sizes)

Fitting Size and Type

63 mm (2 1/2 in.) Dial Size
AN = 1/8 in. male NPT
AO = 1/4 in. male NPT
AV = G1/4B (EN)
BD = R1/4 (PT)
BF = SAE-4 7/16-20

100 mm (4 in.) Dial Size
AO = 1/4 in. male NPT
AP = 1/2 in. male NPT
AW = G1/2B (EN)
BE = R1/2 (PT)

Options (see page 23)
B = Certificate of calibration
E = Material certification
F = Panel-mount clamp①
G = Front flange①
H = Rear flange
I = Adjustable red indicator and min/max drag pointer②
K = Safety glass
N = Orifice (0.023 in. [0.58 mm])
SS = 316 SS Case

① Not available in lower mount gauge configuration. Not available with maximum indicator pointer.

② Not available with 100mm dial; not available with dial range maximums lower than 54 psi (3.7 bar, 0.37 MPa).
Not available with front flange.

Liquid Fill Fluid (see page 23)
X = Unfilled
1 = Glycerin
3 = Silicone

S Model: Solid-Front Stainless Steel Safety Gauge

Features

- 63 and 100 mm (2 1/2 and 4 in.) dial sizes are available.
- Lower mount configuration is liquid fillable.
- Solid front and blowout back for severe service.
- Design meets safety requirements of ASME B40.100 and EN 837-1.

Technical Data

Dial Ranges

Compound Gauges

- Vacuum to 0 psi through vacuum to 200 psi
- Vacuum to 0 bar through vacuum to 9 bar
- Vacuum to 0 MPa through vacuum to 1.5 MPa

Positive-Pressure Gauges

- 0 to 15 psi through 0 to 15 000 psi
- 0 to 1 bar through 0 to 1000 bar
- 0 to 0.1 MPa through 0 to 100 MPa

Accuracy

- 63 mm (2 1/2 in.): ± 1.5 % of span (ASME B40.100 Grade B, EN 837-1 Class 1.6, JIS B7505 Class 1.6)
- 100 mm (4 in.): ± 1.0 % of span (ASME B40.100 Grade 1A, EN 837-1 Class 1.0, JIS B7505 Class 1.0)

Configurations

Lower-back and lower mount

End Connections

63 mm (2 1/2 in.) Dial Size

- 1/4 and 3/8 in.; 6 and 10 mm Swagelok tube adapter
- 1/4 in. male NPT
- G1/4B (EN)
- G1/4B (PF)
- R1/4 (PT)

100 mm (4 in.) Dial Size

- 1/2 in. and 12 mm Swagelok tube adapter
- 1/4 and 1/2 in. male NPT
- G1/2B (EN)
- G1/2B (PF)
- R1/2 (PT)

Weather Protection

- Weather-tight (NEMA 4X/IP65)

Operating Temperature

Ambient

- Unfilled: –40 to 140°F (–40 to 60°C)
- Glycerin-filled: –4 to 140°F (–20 to 60°C)
- Low-temperature glycerin-filled: –29-to 140°F (–34 to 60°C)
- Silicone-filled: –40 to 140°F (–40 to 60°C)

Media

- Unfilled: 392°F (200°C) maximum
- Liquid-filled: 212°F (100°C) maximum

Temperature Error

± 0.4 % for every 18°F (10°C) temperature change from 68°F (20°C)

Materials of Construction

Component	Material
End connection	*316 SS*
Bourdon tube	
Case	304 SS
Fill fluid (if ordered)	Glycerin, low-temperature glycerin, or silicone
Movement	Stainless steel
Lens	Polycarbonate
Lens gasket	Buna N
Dial	Aluminum
Pointer	

Wetted components listed in *italics.*

See page 23 for options and accessories for field installation.

Dimensions

Dimensions are for reference only and are subject to change.

Lower Mount

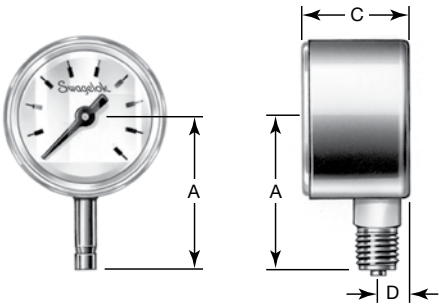

Lower-Back Mount

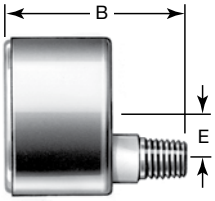

Dial Size mm (in.)	End Connection		Dimensions, in. (mm)				
	Size	Type	A	B	C	D	E
63 (2 1/2)	1/4 in.	Swagelok tube adapter	2.26 (57.3)	2.59 (65.8)	1.65 (42.0)	0.71 (18.0)	0.71 (18.0)
		Male NPT	2.13 (54.0)	2.48 (63.0)			
		G1/4B (EN)					
		G1/4B (PF)					
		R1/4 (PT)					
	3/8 in.	Swagelok tube adapter	2.31 (58.8)	2.65 (67.3)			
	6 mm		2.26 (57.3)	2.59 (65.8)			
	10 mm		2.31 (58.8)	2.65 (67.3)			
100 (4)	1/4 in.	Male NPT	3.15 (80.0)	3.39 (86.0)	2.28 (58.0)	0.94 (24.0)	1.18 (30.0)
	1/2 in.	Swagelok tube adapter	3.44 (87.4)	3.83 (97.4)			
		Male NPT	3.43 (87.0)	3.66 (93.0)			
		G1/2B (EN)					
		G1/2B (PF)					
		R1/2 (PT)					
	12 mm	Swagelok tube adapter	3.44 (87.4)	3.83 (97.4)			

Ordering Information

Build a S model gauge ordering number by combining the designators as shown below. **List option designators *alphabetically.***

PGI - 63S - PG100 - L AQ X - ABJ

Product Function and Type
Pressure gauge, industrial

Dial Size and Model
63S = 63 mm (2 1/2 in.) dial
100S = 100 mm (4 in.) dial

Dial Range
See page 20 and 21.

Process Connection Location
L = Lower mount
B = Lower-back mount

Fitting Size and Type

63 mm (2 1/2 in.) Dial Size
AQ = 1/4 in. Swagelok tube adapter
BG = 3/8 in. Swagelok tube adapter
AS = 6 mm Swagelok tube adapter
BH = 10 mm Swagelok tube adapter
AO = 1/4 in. male NPT
AV = G1/4B (EN)
AX = G1/4B (PF)
BD = R1/4 (PT)

100 mm (4 in.) Dial Size
AR = 1/2 in. Swagelok tube adapter
AT = 12 mm Swagelok tube adapter
AO = 1/4 in. male NPT
AP = 1/2 in. male NPT
AW = G1/2B (EN)
AZ = G1/2B (PF)
BE = R1/2 (PT)

Liquid Fill Fluid (see page 23)
(Lower mount configuration only)
X = Unfilled
1 = Glycerin
2 = Low-temperature glycerin
3 = Silicone

Options (see page 23)
A = ASME B40.100 level IV cleaning①
B = Certificate of calibration
E = Material certification
G = Front flange②
I = Maximum indicating pointer③
J = Adjustable pointer④
K = Safety glass
N = Orifice (0.023 in. [0.58 mm])

① Available for unfilled gauges only.
② Not available in lower mount gauge configuration.
③ Not available with adjustable pointer; not available with dial range maximums lower than 54 psi (3.7 bar, 0.37 MPa).
④ Not available with maximum indicating pointer.

M Model: Stainless Steel Miniature Gauge

Features

- 40 and 50 mm (1 1/2 and 2 in.) dial sizes are available.
- Miniature size allows placement in compact spaces.
- Snap-in lens saves space when compared to twist-on lens.

Technical Data

Dial Ranges

Compound Gauges

- Vacuum to 0 psi through vacuum to 200 psi
- Vacuum to 0 bar through vacuum to 9 bar
- Vacuum to 0 MPa through vacuum to 1.5 MPa

Positive-Pressure Gauges

- 0 to 15 psi through 0 to 10 000 psi
- 0 to 1 bar through 0 to 600 bar
- 0 to 0.1 MPa through 0 to 60 MPa

Accuracy

± 2.5 % of span (ASME B40.100 Grade C, EN 837-1 Class 2.5, JIS B7505 Class 2.5)

Configurations

Center-back and lower mount

End Connections

- 1/8 in. and 1/4 in. male NPT
- G1/8B (EN) and G1/4B (EN)
- R1/8 (PT) and R1/4 (PT)
- 1/4 and 3/8 in.; 6 and 10 mm Swagelok tube adapter
- G1/4B (PF)

Weather Protection

- Weather-tight (NEMA 3/IP54)

Operating Temperature

Ambient

–40 to 140°F (–40 to 60°C)

Media

212°F (100°C) maximum

Temperature Error

± 0.4 % for every 18°F (10°C) temperature change from 68°F (20°C)

Materials of Construction

Component	Material
End connection	*316 SS titanium alloy*
Bourdon tube	
Case	304 SS
Movement	Stainless steel
Lens	Polycarbonate
Dial	Aluminum
Pointer	

Wetted components listed in *italics*.

See page 23 for options and accessories for field installation.

Dimensions

Dimensions are for reference only and are subject to change.

Lower Mount

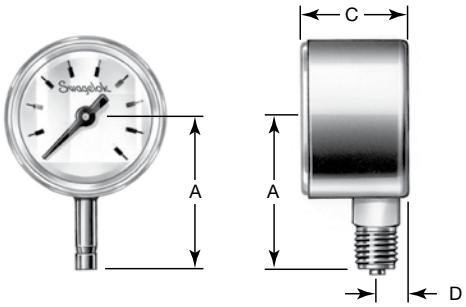

Center-Back Mount

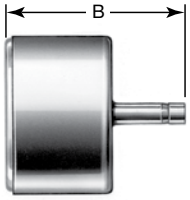

Dial Size mm (in.)	End Connection Size	End Connection Type	Dimensions, in. (mm) A	B	C	D
40 (1 1/2)	1/8 in.	Male NPT	1.42 (36.1)	1.95 (49.5)	0.98 (25.0)	0.35 (9.0)
		G1/8B (EN)				
		R1/8 (PT)				
	1/4 in.	Swagelok tube adapter	1.67 (42.3)	2.20 (55.8)①		
		Male NPT	1.54 (39.0)	2.07 (52.6)		
		G1/4B (EN)				
		G1/4B (PF)				
		R1/4 (PT)				
	3/8 in.	Swagelok tube adapter	1.73 (43.9)	2.26 (57.4)		
	6 mm		1.67 (42.3)	2.20 (55.8)①		
	10 mm		1.73 (43.9)	2.26 (57.4)		
50 (2)	1/8 in.	Male NPT	1.73 (43.9)	1.99 (50.5)	1.02 (25.9)	0.31 (7.9)
		G1/8B (EN)				
		R1/8 (PT)				
	1/4 in.	Swagelok tube adapter	1.98 (50.3)	2.24 (56.8)		
		Male NPT	1.85 (47.0)	2.11 (53.6)		
		G1/4B (EN)	1.85 (47.0)	2.11 (53.6)		
		G1/4B (PF)	1.97 (50.0)	2.22 (56.4)		
		R1/4 (PT)	1.85 (47.0)	2.11 (53.6)		
	3/8 in.	Swagelok tube adapter	2.04 (51.8)	2.30 (58.3)		
	6 mm		1.98 (50.3)	2.24 (56.8)		
	10 mm		2.04 (51.8)	2.30 (58.3)		

① 2.22 in. (56.3 mm) for gauges with front flange.

Ordering Information

Build an M model gauge ordering number by combining the designators as shown below. **List option designators *alphabetically.***

PGI - 50M - PG100 - L AQ X - ABE

Product Function and Type
Pressure gauge, industrial

Dial Size and Model
40M = 40 mm (1 1/2 in.) dial
50M = 50 mm (2 in.) dial

Dial Range
See page 20 and 21.

Process Connection Location
C = Center-back mount
L = Lower mount

Fitting Size and Type
AQ = 1/4 in. Swagelok tube adapter
BG = 3/8 in. Swagelok tube adapter
AS = 6 mm Swagelok tube adapter
BH = 10 mm Swagelok tube adapter
AN = 1/8 in. male NPT
AO = 1/4 in. male NPT
AU = G1/8B (EN)
AV = G1/4B (EN)
AX = G1/4B (PF)
BC = R1/8 (PT)
BD = R1/4 (PT)

Liquid Fill Fluid—Not Available
Unfilled

Options (see page 23)
A = ASME B40.100 level IV cleaning
B = Certificate of calibration
E = Material certification
F = Panel-mount clamp①
G = Front flange①
L = Glass lens with friction ring
N = Orifice (0.023 in. [0.58 mm])

① Available factory installed only. Not available in lower mount configuration.

L Model: Stainless Steel Low-Pressure Gauge

Features

- 63 and 100 mm (2 1/2 and 4 in.) dial sizes are available.
- Diaphragm capsule design offers low-pressure measurement capability.
- A zero adjustment screw is on the dial.
- Lens is constructed of polycarbonate.

Technical Data

Dial Ranges

Positive-Pressure Gauges

- 0 to 15 in. H_2O through 0 to 200 in. H_2O
- 0 to 5 psi through 0 to 10 psi
- 0 to 40 mbar through 0 to 400 mbar
- 0 to 4 kPa through 0 to 50 kPa

Accuracy

± 1.5 % of span (ASME B40.100 Grade B, EN 837-3 Class 1.6, JIS B7505 Class 1.6)

Configurations

- 63 mm (2 1/2 in.): lower mount
- 100 mm (4 in.): lower-back and lower mount

End Connections

63 mm (2 1/2 in.) Dial Size

- 1/4 and 3/8 in.; 6 and 10 mm Swagelok tube adapter
- 1/4 in. male NPT
- G1/4B (EN)
- G1/4B (PF)
- R1/4 (PT)

100 mm (4 in.) Dial Size

- 1/2 in. and 12 mm Swagelok tube adapter
- 1/4 and 1/2 in. male NPT
- G1/2B (EN)
- G1/2B (PF)
- R1/2 (PT)

Weather Protection

- Weather-tight (NEMA 3/IP54)

Operating Temperature

Ambient

–40 to 140°F (–40 to 60°C)

Media

212°F (100°C) maximum

Temperature Error

± 0.6 % for every 18°F (10°C) temperature change from 68°F (20°C)

Materials of Construction

Component	Material
End connection	*316 SS*
Diaphragm capsule	
Case	304 SS
Movement	Stainless steel
Lens	Polycarbonate
Dial	Aluminum
Pointer	

Wetted components listed in *italics*.

See page 23 for options and accessories for field installation.

Dimensions

Dimensions are for reference only and are subject to change.

Lower Mount

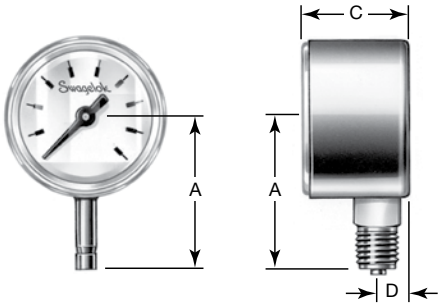

Lower-Back Mount

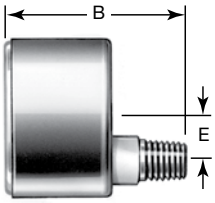

Dial Size mm (in.)	End Connection Size	End Connection Type	Dimensions, in. (mm) A	B	C	D	E
63 (2 1/2)	1/4 in.	Swagelok tube adapter	2.26 (57.3)	—	1.65 (42.0)	0.35 (9.0)	—
		Male NPT	2.05 (52.0)				
		G1/4B (EN)					
		G1/4B (PF)					
		R1/4 (PT)					
	3/8 in.	Swagelok tube adapter	2.31 (58.8)				
	6 mm		2.26 (57.3)				
	10 mm		2.31 (58.8)				
100 (4)	1/4 in.	Male NPT	3.15 (80.0)	3.27 (83.0)	2.28 (58.0)	0.63 (16.0)	1.18 (30.0)
	1/2 in.	Swagelok tube adapter	3.60 (91.4)	3.44 (87.4)			
		Male NPT	3.43 (87.0)	3.27 (83.0)			
		G1/2B (EN)					
		G1/2B (PF)					
		R1/2 (PT)					
	12 mm	Swagelok tube adapter	3.60 (91.4)	3.44 (87.4)			

Ordering Information

Build an L model gauge ordering number by combining the designators as shown below. **List option designators *alphabetically.***

PGI - **63L** - **IG30** - **L** **AQ** X - **ABH**

Product Function and Type
Pressure gauge, industrial

Dial Size and Model
63L = 63 mm (2 1/2 in.) dial
100L = 100 mm (4 in.) dial

Dial Range
See page 20.

Process Connection Location
L = Lower mount (all dial sizes)
B = Lower-back mount (100 mm [4 in.] dial size only)

Fitting Size and Type

63 mm (2 1/2 in.) Dial Size
AQ = 1/4 in. Swagelok tube adapter
BG = 3/8 in. Swagelok tube adapter
AS = 6 mm Swagelok tube adapter
BH = 10 mm Swagelok tube adapter
AO = 1/4 in. male NPT
AV = G1/4B (EN)
AX = G1/4B (PF)
BD = R1/4 (PT)

100 mm (4 in.) Dial Size
AR = 1/2 in. Swagelok tube adapter
AT = 12 mm Swagelok tube adapter
AO = 1/4 in. male NPT
AP = 1/2 in. male NPT
AW = G1/2B (EN)
AZ = G1/2B (PF)
BE = R1/2 (PT)

Liquid Fill Fluid—Not Available
Unfilled

Options (see page 23)
A = ASME B40.100 level IV cleaning
B = Certificate of calibration
E = Material certification
F = Panel-mount clamp①②
G = Front flange①
H = Rear flange
I = Maximum indicating pointer②③
K = Safety glass
N = Orifice (0.023 in. [0.58 mm])

① Not available in lower mount gauge configuration.
② Available for 100 mm (4 in.) dial size only.
③ Not available with dial range maximums lower than 1.5 psi (103 mbar, 10.3 kPa, 41.5 in. H_2O).

P Model: Reinforced Thermoplastic Industrial Process Gauge

Features

- 115 and 160 mm (4 1/2 and 6 in.) dial sizes are available.
- Solid front and blowout back for severe service.
- Design meets safety requirements of ASME B40.100.
- Adjustable pointer is standard.
- Threaded cover ring allows easy access to pointer.
- Lens is constructed of clear acrylic plastic.
- Design is liquid fillable.

Technical Data

Dial Ranges

Compound Gauges

- Vacuum to 0 psi through vacuum to 400 psi
- Vacuum to 0 bar through vacuum to 9 bar
- Vacuum to 0 MPa through vacuum to 1.5 MPa
- Vacuum to 0 kPa through vacuum to 2500 kPa

Positive-Pressure Gauges

- 0 to 15 psi through 0 to 15 000 psi
- 0 to 1 bar through 0 to 1000 bar
- 0 to 0.1 MPa through 0 to 100 MPa
- 0 to 60 kPa through 0 to 100 000 kPa

Accuracy

± 0.5 % of span (ASME B40.100 Grade 2A)

Configurations

Lower-back mount and lower mount

End Connections

115 mm (4 1/2 in.) Dial Size

- 1/2 in. Swagelok tube adapter
- 1/4 and 1/2 in. male NPT

160 mm (6 in.) Dial Size

- 1/2 in. male NPT

Weather Protection

- Weather resistant (NEMA 3/IP54)—dry case
- Weather-tight (NEMA 4X/IP65)—liquid-fillable case

Operating Temperature

Ambient

- Unfilled: –40 to 140°F (–40 to 60°C)
- Glycerin-filled: –4 to 140°F (–20 to 60°C)
- Silicone-filled: –40 to 140°F (–40 to 60°C)

Media

- 212°F (100°C) maximum
- Maximum media temperature for the brass process gauge is 140°F (60°C)

Temperature Error

± 0.4 % for every 18°F (10°C) temperature change from 68°F (20°C)

Materials of Construction

Component	Material
End connection	*316 SS*①
Bourdon tube	
Case	Black glass-reinforced thermoplastic
Fill fluid (if ordered)	Glycerin, low-temperature glycerin, or silicone
Movement	Stainless steel
Lens	Acrylic
Lens gasket	Buna N
Dial	Aluminum
Pointer	

Wetted components listed in *italics*.

① 115 mm (4 1/2 in.) P model gauges are available in alloy 400 materials; lower mount gauges are also available in brass.

See page 23 for options and accessories for field installation.

Dimensions

Dimensions are for reference only and are subject to change.

Lower Mount **Lower-Back Mount**

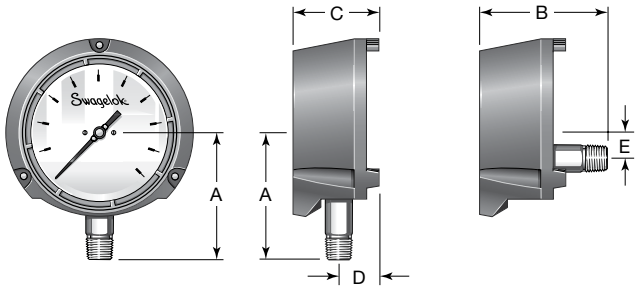

Dial Size mm (in.)	End Connection		Dimensions, in. (mm)				
	Size	Type	A	B	C	D	E
115 (4 1/2)	1/2 in.	Swagelok tube adapter	4.27 (108)	4.95 (126)	3.31 (84.0)	1.57 (40.0)	1.12 (28.5)
	1/4 in.	Male NPT	3.82 (97.0)	4.50 (114)			
	1/2 in.		4.06 (103)	4.74 (120)			
160 (6)	1/2 in.		4.82 (123)	4.86 (123)	3.46 (88.0)		

Ordering Information

Build a P model gauge ordering number by combining the designators as shown below. **List option designators *alphabetically.***

PGI - 115P - OG160 - L AR X - AB J

Product Function and Type
Pressure gauge, industrial

Dial Size and Model
115P = 115 mm (4 1/2 in.) dial
160P = 160 mm (6 in.) dial

Dial Range
See page 20, 21, and 22.

Process Connection Location
L = Lower mount
B = Lower-back mount

Fitting Size and Type
115 mm (4 1/2 in.) Dial Size
AR = 1/2 in. Swagelok tube adapter
AO = 1/4 in. male NPT
AP = 1/2 in. male NPT
BT = 1/2 in. long Swagelok tube adapter①
① For use with female Swagelok end connections.

160 mm (6 in.) Dial Size
AP = 1/2 in. male NPT
AR = 1/2 in. Swagelok tube adapter

Liquid Fill Fluid (see page 23)
X = Unfilled
1 = Glycerin
2 = Low-temperature glycerin
3 = Silicone

Pointer
Standard adjustable pointer

Options (see page 23)
A = ASME B40.100 level IV cleaning①
B = Certificate of calibration
F = Panel-mount clamp②③
I = Maximum indicating pointer③
K = Safety glass④
M = Liquid-fill membrane⑤
N = Orifice (0.023 in. [0.58 mm])
Q = Brass (wetted components)⑥
R = Alloy 400 (wetted components)③
S = Mark pointer③
9320 = White
9321 = Orange
9322 = Green
9323 = Glow

① Available for unfilled gauges only.
② Not available in lower mount gauge configuration.
③ Available on 115 mm (4 1/2 in.) dial size only.
④ Not available on gauges with maximum indicating or mark pointer.
⑤ Required for lower-back mount configuration with liquid fill. Standard on lower mount configurations.
⑥ Available on 115 mm (4 1/2 in.) dial size with lower mount only.

A Model: Refrigeration Ammonia Gauge

Features

- Refrigerant ammonia pressure measurement and temperature with ammonia refrigerant scales on dial.
- 63 and 100 mm (2 1/2 and 4 in.) dial sizes are available.
- Crimped ring provides a permanent seal of gauge case to lens.
- Lens is constructed of clear polycarbonate.
- Design is liquid fillable.

Technical Data

Dial Ranges

Compound Gauges

- 30 in. Hg / 0 to 150 psi (89°F)
- 30 in. Hg / 0 to 300 psi (126°F)

Positive-Pressure Gauges

- 0 to 150 psi (89°F)
- 0 to 300 psi (126°F)

Accuracy

- 63 mm (2 1/2 in.): ± 1.5 % of span (ASME B40.100 Grade B
- 100 mm (4 in.): ± 1.0 % of span (ASME B40.100 Grade 1A

Configurations

- 63 mm (2 1/2 in.): center-back and lower mount
- 100 mm (4 in.): lower-back and lower mount

End Connections

63 mm (2 1/2 in.) Dial Size

- 1/4 and 3/8 in.; 6 and 10 mm Swagelok tube adapter
- 1/4 in. male NPT

100 mm (4 in.) Dial Size

- 1/2 in. and 12 mm Swagelok tube adapter
- 1/4 and 1/2 in. male NPT

Weather Protection

- Weather-tight (NEMA 4X/IP65)

Operating Temperature

Ambient

- Unfilled: –40 to 140°F (–40 to 60°C)
- Glycerin-filled: –4 to 140°F (–20 to 60°C)
- Low-temperature glycerin-filled: –29-to 140°F (–34 to 60°C)
- Silicone-filled: –40 to 140°F (–40 to 60°C)

Media

212°F (100°C) maximum

Temperature Error

± 0.4 % for every 18°F (10°C) temperature change from 68°F (20°C)

Materials of Construction

Component	Material
End connection	*316 SS*
Bourdon tube	
Case	304 SS
Fill fluid (if ordered)	Glycerin, low-temperature glycerin, or silicone
Movement	Stainless steel
Lens	Polycarbonate
Lens gasket	Buna N
Dial	Aluminum
Pointer	

Wetted components listed in *italics*.

See page 23 for options and accessories for field installation.

Dimensions

Dimensions are for reference only and are subject to change.

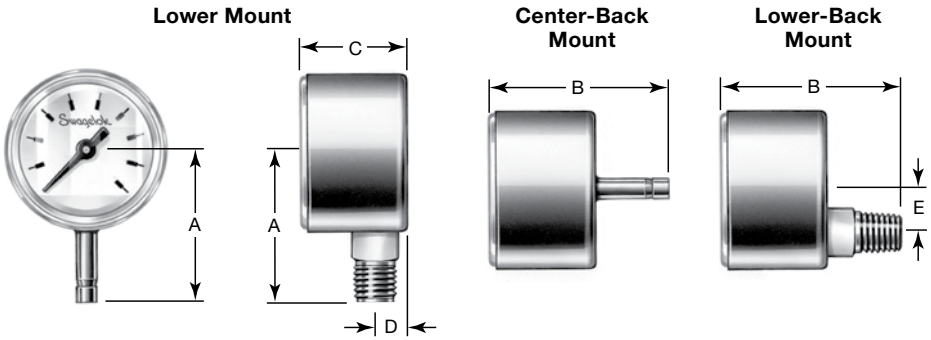

Dial Size mm (in.)	End Connection		Dimensions, in. (mm)				
	Size	Type	A	B	C	D	E
63 (2 1/2)	1/4 in.	Swagelok tube adapter	2.22 (56.3)	2.37 (60.3)	1.30 (33.0)①	0.39 (10.0)	—
		Male NPT	2.09 (53.0)	2.24 (57.0)			
	3/8 in.	Swagelok tube adapter	2.28 (57.8)	2.43 (61.8)			
	6 mm		2.22 (56.3)	2.37 (60.3)			
	10 mm		2.28 (57.8)	2.43 (61.8)			
100 (4)	1/4 in.	Male NPT	3.15 (80.0)	3.27 (83.0)	1.97 (50.0)	0.63 (16.0)	1.18 (30.0)
	1/2 in.	Swagelok tube adapter	3.64 (92.4)	3.48 (88.4)			
		Male NPT	3.43 (87.0)	3.27 (83.0)			
	12 mm	Swagelok tube adapter	3.64 (92.4)	3.48 (88.4)			

① 1.10 (28.0) for center-back mount.

Ordering Information

Build a A model gauge ordering number by combining the designators as shown below. **List option designators *alphabetically.***

PGI - 63A - NG150 - L AQ X - BH

Product Function and Type
Pressure gauge, industrial

Dial Size and Model
63A = 63 mm (2 1/2 in.) dial
100A = 100 mm (4 in.) dial

Dial Range
See page 20 and 21.

Process Connection Location
L = Lower mount (all dial sizes)
C = Center-back mount (63 mm [2 1/2 in.] dial size only)
B = Lower-back mount (100 mm [4 in.] dial size only)

Fitting Size and Type

63 mm (2 1/2 in.) Dial Size
AQ = 1/4 in. Swagelok tube adapter
BG = 3/8 in. Swagelok tube adapter
AS = 6 mm Swagelok tube adapter
BH = 10 mm Swagelok tube adapter
AO = 1/4 in. male NPT

100 mm (4 in.) Dial Size
AR = 1/2 in. Swagelok tube adapter
AT = 12 mm Swagelok tube adapter
AO = 1/4 in. male NPT
AP = 1/2 in. male NPT

Options (see page 23)
B = Certificate of calibration
E = Material certification
F = Panel-mount clamp①
G = Front flange①
H = Rear flange
I = Maximum indicating pointer
N = Orifice (0.023 in. [0.58 mm])

① Not available in lower mount gauge configuration.

Liquid Fill Fluid (see page 23)
X = Unfilled
1 = Glycerin
2 = Low-temperature glycerin
3 = Silicone

Dial Range Designators

The selected dial range should be approximately two times the system working pressure, and the system working pressure should be in the middle half (25 to 75 %) of the dial range. Contact your authorized Swagelok sales and service representative if the system working pressure will exceed 75 % of the dial range.

Maximum pressure is limited by the end connection and materials of construction of wetted components.

Not all dial ranges and end connections are available on all models.

L Model

Dial Range, psi (primary scale: psi; secondary scale: bar)		
Minimum	**Maximum**	**Designator**
0	5	PG5
	10	PG10

L Model

Dial Range, kPa (primary scale: kPa; secondary scale mm H_2O)		
Minimum	**Maximum**	**Designator**
0	4	RG4
	5	RG5
	7	RG7
	10	RG10
	15	RG15
	20	RG20
	50	RG50

L Model

Dial Range, kPa (primary scale: kPa; no secondary scale)		
Minimum	**Maximum**	**Designator**
0	4	JG4
	5	JG5
	7	JG7
	10	JG10
	15	JG15
	20	JG20
	50	JG50

A Model

Dial Range, psi (primary scale: psi; secondary scale: temperature)		
Minimum	**Maximum**	**Designator**
0	150	NG150
0	300	NG300
–30	150	NC150
–30	300	NC300

L Model

Dial Range, in. H_2O (primary scale: in. H_2O; no secondary scale)		
Minimum	**Maximum**	**Designator**
0	15	IG15
	20	IG20
	30	IG30
	60	IG60
	100	IG100
	200	IG200

B, C, F, M, S, and P Models

Dial Range, bar (primary scale: bar; secondary scale: psi)		
Minimum	**Maximum**	**Designator**
Vacuum –1 bar	0	BC0
	0.6	BC.6
	1.5	BC1.5
	3	BC3
	9	BC9
0	1	BG1
	1.6	BG1.6
	2.5	BG2.5
	4	BG4
	6	BG6
	10	BG10
	16	BG16
	25	BG25
	40	BG40
	60	BG60
	100	BG100
	160	BG160
	250	BG250
	400	BG400
	600	BG600
	1000	BG1000

L Model

Dial Range, mbar (primary scale: mbar; no secondary scale)		
Minimum	**Maximum**	**Designator**
0	40	FG40
	60	FG60
	100	FG100
	160	FG160
	250	FG250
	400	FG400

B, C, F, M, S, and P Models

Dial Range, MPa (primary scale: MPa; secondary scale: kgf/cm^2)		
Minimum	**Maximum**	**Designator**
Vacuum –0.1 MPa	0	LC0
	0.06	LC.06
	0.15	LC.15
	0.30	LC.3
	0.50	LC.5
	0.90	LC.9
	1.5	LC1.5
0	0.1	LG.1
	0.16	LG.16
	0.25	LG.25
	0.40	LG.4
	0.60	LG.6
	1	LG1
	1.6	LG1.6
	2.5	LG2.5
	4	LG4
	6	LG6
	10	LG10
	16	LG16
	25	LG25
	40	LG40
	60	LG60
	100	LG100

Dial Range Designators

The selected dial range should be approximately two times the system working pressure, and the system working pressure should be in the middle half (25 to 75 %) of the dial range. Contact your authorized Swagelok representative if the system working pressure will exceed 75 % of the dial range.

Maximum pressure is limited by the end connection and materials of construction of wetted components.

Not all dial ranges and end connections are available on all models.

B, C, F, M, S, and P Models

Dial Range, MPa (primary scale: MPa; no secondary scale)		
Minimum	**Maximum**	**Designator**
Vacuum –0.1 MPa	0	MC0
	0.06	MC.06
	0.15	MC.15
	0.30	MC.3
	0.50	MC.5
	0.90	MC.9
	1.5	MC1.5
0	0.1	MG.1
	0.16	MG.16
	0.25	MG.25
	0.40	MG.4
	0.60	MG.6
	1	MG1
	1.6	MG1.6
	2.5	MG2.5
	4	MG4
	6	MG6
	10	MG10
	16	MG16
	25	MG25
	40	MG40
	60	MG60
	100	MG100

B, C, F, M, S, and P Models

Dial Range, psi (primary scale: psi; secondary scale: kPa)		
Minimum	**Maximum**	**Designator**
Vacuum –30 in. Hg	0	OC0
	15	OC15
	30	OC30
	60	OC60
	100	OC100
	160	OC160
	200	OC200
0	15	OG15
	30	OG30
	60	OG60
	100	OG100
	160	OG160
	200	OG200
	300	OG300
	400	OG400
	500	OG500
	600	OG600
	800	OG800
	1 000	OG1000
	1 500	OG1500
	2 000	OG2000
	3 000	OG3000
	4 000	OG4000
	5 000	OG5000
	6 000	OG6000
	10 000	OG10K
	15 000	OG15K

B, C, F, M, S, and P Models

Dial Range, psi (primary scale: psi; secondary scale: bar)		
Minimum	**Maximum**	**Designator**
Vacuum –30 in. Hg	0	PC0
	15	PC15
	30	PC30
	60	PC60
	100	PC100
	160	PC160
	200	PC200
0	15	PG15
	30	PG30
	60	PG60
	100	PG100
	160	PG160
	200	PG200
	300	PG300
	400	PG400
	500	PG500
	600	PG600
	800	PG800
	1 000	PG1000
	1 500	PG1500
	2 000	PG2000
	3 000	PG3000
	4 000	PG4000
	5 000	PG5000
	6 000	PG6000
	10 000	PG10K
	15 000	PG15K

Dial Range Designators

The selected dial range should be approximately two times the system working pressure, and the system working pressure should be in the middle half (25 to 75 %) of the dial range. Contact your authorized Swagelok representative if the system working pressure will exceed 75 % of the dial range.

Maximum pressure is limited by the end connection and materials of construction of wetted components.

Not all dial ranges and end connections are available on all models.

P Model

Dial Range, KPa (primary scale: KPa; no secondary scale)		
Minimum	**Maximum**	**Designator**
Vacuum –100 KPa	0	JC0
	60	JC60
	150	JC150
	300	JC300
	500	JC500
	900	JC900
	1 500	JC1500
	2 500	JC2500
0	60	JG60
	100	JG100
	160	JG160
	250	JG250
	400	JG400
	600	JG600
	1 000	JG1000
	1 600	JG1600
	2 500	JG2500
	4 000	JG4000
	6 000	JG6000
	10 000	JG10K
	16 000	JG16K
	25 000	JG25K
	40 000	JG40K
	60 000	JG60K
	100 000	JG100K

P Model

Dial Range, psi (primary scale: psi; no secondary scale)		
Minimum	**Maximum**	**Designator**
Vacuum –30 in. Hg	0	NC0
	15	NC15
	30	NC30
	60	NC60
	100	NC100
	160	NC160
	200	NC200
	300	NC300
	400	NC400
0	15	NG15
	30	NG30
	60	NG60
	100	NG100
	160	NG160
	200	NG200
	300	NG300
	400	NG400
	500	NG500
	600	NG600
	800	NG800
	1 000	NG1000
	1 500	NG1500
	2 000	NG2000
	3 000	NG3000
	4 000	NG4000
	5 000	NG5000
	6 000	NG6000
	10 000	NG10K
	15 000	NG15K

P Model

Dial Range, psi (primary scale: psi; secondary scale kgf/cm^2)		
Minimum	**Maximum**	**Designator**
Vacuum –30 in. Hg	0	QC0
	15	QC15
	30	QC30
	60	QC60
	100	QC100
	160	QC160
	200	QC200
	300	QC300
	400	QC400
0	15	QG15
	30	QG30
	60	QG60
	100	QG100
	160	QG160
	200	QG200
	300	QG300
	400	QG400
	500	QG500
	600	QG600
	800	QG800
	1 000	QG1000
	1 500	QG1500
	2 000	QG2000
	3 000	QG3000
	4 000	QG4000
	5 000	QG5000
	6 000	QG6000
	10 000	QG10K
	15 000	QG15K

Options and Accessories

Factory-installed options are specified in gauge ordering numbers, as shown in **Ordering Information** for each gauge model. Some items are available only as factory-installed options; others are available for field installation, as described below.

Adjustable Pointers

Gauges are available with adjustable pointers that allow resetting to zero. Adjustable pointers are standard for all P model gauges and are optional for B and S model gauges.

Orifices

Orifices are used to restrict flow, reducing the immediate effect of pulsations and pressure spikes. All Swagelok industrial and process gauges are available with orifices as factory-installed options.

Threaded orifices (0.023 in. [0.58 mm] inside diameter) are available for P model industrial process gauges as accessories for field installation.

P Model Threaded Orifice Kits

Orifice Material	Ordering Number
Stainless steel	PGI-P-ORIFICE
Brass	PGI-P-ORIFICE-Q
Alloy 400	PGI-P-ORIFICE-R

Special Cleaning

Special cleaning is available as an option for unfilled gauges. Internal components are cleaned in accordance with ASME B40.100, Section IV, which states that the gauge shall be free of visually detectable moisture and foreign matter (chips, slivers, weld slag or splatter, shop soil, greases, oils, or other contaminants) that could be mechanically detrimental to proper function of the gauge. The gauge is then capped and bagged to maintain cleanliness.

Certificates of Calibration

This option provides the user with a calibration sheet and a serial-numbered gauge that has been calibrated with a gauge traceable to DKD for gauges manufactured in Germany or to NIST for gauges manufactured in the U.S. Certificates of calibration are available for all Swagelok gauges.

Material Certifications

This option provides the user with a General Material Certificate of Compliance, EN 10204 2.2, stating that the gauges were manufactured from material purchased and certified as being in accordance with the specifications listed in this catalog. Material certifications are available for B, C, S, M, and L model gauges.

Liquid Fill

Liquid-filled gauges enhance the reliability and integrity of the measuring system for long periods under extreme operating conditions by dampening vibration and lubricating the gauge movement. B, C, S, and P model gauges are available liquid filled.

Because the type of liquid used to fill the gauge may vary with the application, Swagelok offers glycerin, low-temperature glycerin, and silicone. It is important to choose the proper fill liquid based on the operating temperature and pressure.

Ambient Operating Temperature

Temperature °F (°C)	Fill Fluid
–40 to 140 (–40 to 60)	Unfilled
–4 to 140 (–20 to 60)	Glycerin
–29 to 140 (–34 to 60)	Low-temperature glycerin
–40 to 140 (–40 to 60)	Silicone

Operating Pressure (Dial Range)

If the dial range selected is equal to or below 60 psi, 4 bar, 0.4 MPa, or equivalent, liquid-filled gauges must use low-temperature glycerin or silicone fill liquid to ensure fastest response and gauge accuracy.

In addition, if a maximum indicating pointer is selected in a liquid-filled gauge, the fill liquid should be low-temperature glycerin or silicone.

⚠ **Glycerin- and silicone-filled gauges cannot be used where strong oxidizing agents are present.**

Glycerin and low-temperature glycerin fill liquid are available as accessories for field installation.

Fill Liquid	Size	Ordering Number
Glycerin	8 oz (236 mL) squirt bottle	PGI-GLY-8
	1 gal (3.8 L) bottle	PGI-GLY-128
Low-temperature glycerin	8 oz (236 mL) squirt bottle	PGI-GLY-8-86/14
	1 gal (3.8 L) bottle	PGI-GLY-128-86/14

Options and Accessories

Panel-Mount Clamps

Stainless steel panel-mount clamps are available for flush mounting Swagelok industrial gauges. The panel-mount clamp is easily installed on the gauge. This option is not available on lower mount or S model gauges. Panel-mount clamps on M model gauges must be factory installed and are available as accessories for field installation on A, B, C, L, and P model gauges.

Panel-Mount Clamp Kits

Gauge Model	Ordering Number
B model 63 mm (2 1/2 in.) size	PGI-63B-PMC
A, C model 63 mm (2 1/2 in.) size	PGI-63C-PMC
A, B, C, and L models 100 mm (4 in.) size	PGI-100BCL-PMC
P model 115 mm (4 1/2 in.) size	PGI-P-115-PMC

Front Flanges

Polished stainless steel front flanges are available for flush panel mounting of Swagelok industrial gauges. This option is not available on lower mount or P model gauges and must be factory installed on C and M model gauges.

S, B, and L Model Front Flange Kits

Gauge Size	Ordering Number
63 mm (2 1/2 in.)	PGI-63SBL-FF
100 mm (4 in.)	PGI-100SBL-FF

Rear Flanges

Stainless steel rear flanges are available for mounting on the front of the panel. This option is not available on M, S, and P model gauges. Rear flanges are available factory installed on A, B, and C model gauges and as accessories for field installation.

A, B, and C Model Rear Flange Kits

Gauge Size	Ordering Number
63 mm (2 1/2 in.)	PGI-63BCL-RF
100 mm (4 in.)	PGI-100BCL-RF

Maximum Indicating Pointers

Maximum indicating pointers (MIP), available for S, B, C, L, and P models, identify pressure spikes in a system and are helpful during system startup and troubleshooting. The MIP adds an additional 1 % error to the gauge because of the increased load on the bourdon tube. This option must be factory installed on A and C model gauges and is available for field installation on S, B, L, and P model gauges.

Maximum Indicating Pointer Kits

Gauge Model	Ordering Number
S, B, and L 63 mm (2 1/2 in.) size	PGI-63-MIP-SG
S, B, and L 100 mm (4 in.) size	PGI-100-MIP-SG
P 115 mm (4 1/2 in.) size	PGI-P-115-MIP-A

Options and Accessories

Gauge Faces for Low Light Environments

Illumination options, combined with larger numerals on the dial face, offer improved visibility in low light environments. Possible applications include: low light plant interiors, limited access areas, behind machinery and ductwork, areas where steam may inhibit visibility, and outdoor areas requiring gauge reading from a distance. These face options are available on all C Model, P Model, gauges and thermometers.

Option 1

Option 1 includes a retro-reflective material affixed to the dial face. The fluorescent color absorbs non-visual UL light, reflecting additional light and making the gauge more visible.

Option 2

Option 2 includes a retro-reflective, photo-luminescent dial design that illumintes the entire front of the instrument dial for an extended amount of time after exposure to a light source for as little as 10 seconds. The appearance of the dial face is white when not illuminated.

Gauge Faces

Gauge Face	Ordering Number
White (Option 1)	9320
Orange (Option 1)	9321
Green (Option 1)	9322
Glow (Option 2)	9323

Options and Accessories

Coil Steam Siphons

Siphons protect pressure instruments in live steam service or other high-temperature vapor applications. The vapor condenses inside the coil of the siphon, preventing the high-temperature vapors from reaching the sensing element of the pressure instrument. Siphons are available in carbon and stainless steel.

Coil Steam Siphon Kits

Material	End Connection	Wall Schedule	Ordering Number
Steel	1/4 in. NPT	40	PGI-4-CSS-S-SC40
		80	PGI-4-CSS-S-SC80
	1/2 in. NPT	80	PGI-8-CSS-S-SC80
		160	PGI-8-CSS-S-SC160
Stainless steel		80	PGI-8-CSS-SS-SC80
		160	PGI-8-CSS-SS-SC160

Strap Wrenches

Strap wrenches are used to remove the bayonet ring of the S, B, and L model gauges.

Strap wrench ordering number: **PGI-SB-CRR**

Accessories for Field Installation

Additional items for gauges can be ordered for field installation.

Kit	Ordering Number
Safety glass, 115 mm (4 1/2 in.) size	PGI-P-115-SGLASS
Safety glass, 160 mm (6 in.) size	PGI-P-160-SGLASS
Safety glass, 63 mm (2 1/2 in.) size	PGI-63-SGLENS
Safety glass, 100 mm (4 in.) size	PGI-100-SGLENS
Fill plug with toggle, for 63 mm dials	PGI-63-TOGGLE
Fill plug without toggle, for 63 mm dials	PGI-63-FILLPLUG
Fill plug with toggle, for 100 mm dials	PGI-100-TOGGLE
Fill plug without toggle, for 100 mm dials	PGI-100-FILLPLUG
Cover ring remover, 115 mm (4 1/2 in.) size	PGI-P-115-CRR
Liquid-fill kit lower mount (includes membrane and plug)	PGI-P-FILLKIT-LM
Liquid-fill kit lower-back mount (includes membrane and plug)	PGI-P-FILLKIT-LBM
Mark pointer	PGI-P-115-MARK-A

Positionable Gauge Adapters

Features

- Positionable gauge adapter allows 360° orientation of pressure gauges.
- Inlet connection is 1/2 in. male NPT.
- Available with 1/2 in. NPT and ISO parallel gauge connections.
- All 316 stainless steel construction.
- Optional gauge siphon/snubber helps protect the instrument from steam and vapor and dampens pressure fluctuations.

Materials of Construction

Component	Material Grade/ ASTM Specification
Connector	316, 316L/A479
Gauge nut, coupling	*316, 316L/A479*
Seal washer	*Annealed 316 SS*
Siphon tube, damper tube, plug	*316 SS*

Wetted components listed in *italics*.

Ordering Information

Select a gauge adapter ordering number.

Outlet Connection	Pressure Rating	
	6000 psig (413 bar)	10 000 psig (689 bar)
	Gauge Adapter Ordering Numbers	
1/2 in. female NPT	SS-PGA-7-8	SS-PGA-7-8-10K
1/2 in. male NPT	SS-PGA-1-8	SS-PGA-1-8-10K
G1/2 female ISO (RG)	SS-PGA-7-8RG	SS-PGA-7-8RG-10K

To order an optional gauge siphon/snubber, add **-SN** to the gauge adapter ordering number.

Example: SS-PGA-7-8**-SN**

Options and Accessories

Snubber Fittings—Gauge Protectors

Swagelok snubber fittings protect gauges and instruments from system pressure surges and shocks. Pressure damping (snubbing) is accomplished through the use of a porous sintered 316 stainless steel element.

Installing a Swagelok snubber fitting upstream from the gauge reduces the gauge's response rate. The response rate generally varies with the initial pressure drop across the porous element of the snubber fitting and allows the gauge to reach line pressure smoothly.

Snubber fittings should be used only to protect against pressure shocks, impulses, and surges. Systems requiring control of contaminants should use filters suited to the application. Refer to Swagelok *Filters* catalog, MS-01-92.

Elements

With five basic elements available, snubber fittings can meet the requirements of fluid applications ranging from light gases to liquids with viscosities above 1000 SUS (Saybolt universal seconds) (220 cSt [mm²/s]). Element designators are stamped on all fittings for proper identification.

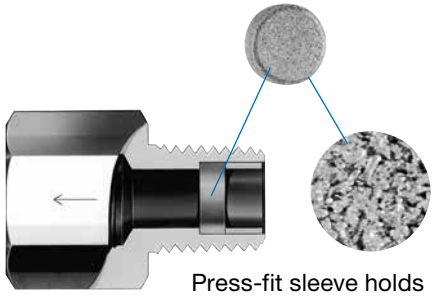

Fluid	Average Fluid Flow Estimate L/min①	Element Designator
Light gases from 69 to 79 SUS (13 to 16 cSt [mm²/s])	0.05 at 25 psig (1.72 bar)	G
Air-steam from 75 to 119 SUS (15 to 25 cSt [mm²/s])	2.4 at 25 psig (1.72 bar)	A
Water, light oils from 75 to 250 SUS (15 to 54 cSt [mm²/s])	3.3 at 25 psig (1.72 bar)	W
Oils from 250 to 1000 SUS (54 to 220 cSt [mm²/s])	1.3 at 10 psig (0.68 bar)	L
Oils of 1000 SUS (220 cSt [mm²/s]) and above	0.9 at 10 psig (0.68 bar)	H②

① Product is tested with air at ambient temperature. Flow estimate is the average air flow multiplied by a ratio of nominal kinematic viscosities (air/fluid).

② Not available for ordering number -4-SRA-2.

Typical Installation

Effective Element Area

Fittings with 1/8 in. Male NPT Ends

0.019 in.² (12.3 mm²)

All Other Fittings

0.062 in.² (40.0 mm²)

Materials of Construction

Component	Material Grade/ASTM Specification
Fitting body	*316 SS/A276 or brass/B453*
Ferrules, nut	316 SS/A276 or brass/B453
Sleeve	*316 SS/A276*
Element	*316 SS*

Wetted components listed in italics.

Pressure Ratings Basis

Pressure ratings are based on ASME Code for Process Piping B31.3, at 70°F (20°C).

Maximum Differential Pressure

Stainless Steel Fittings with 1/8 in. Male NPT Ends

5000 psig (344 bar)

All Other Fittings

Stated working pressures

⚠ **Pressure must be applied only in the direction of the flow arrow.**

Temperature Ratings

Fitting Material	Maximum Operating Temperature °F (°C)
Brass	400 (204)
316 SS	1000 (538)

Options and Accessories

Snubber Fittings—Gauge Protectors

Ordering Information

Select a basic ordering number from the tables below.

Example: **-4-SA-E**

Add a body material designator.

Material	Designator
316 SS	SS
Brass	B

Example: **SS**-4-SA-E

Add an element designator from the table on page 27.

Example: SS-4-SA-E**G**

Dimensions

Dimensions are for reference only, and are subject to change.
Dimensions shown with Swagelok tube fitting nuts finger-tight.

Adapter

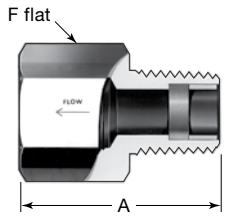

NPT Male/ Female Pipe Size in.	Basic Ordering Number	Dimensions in. (mm)		Working Pressure at 70°F (20°C) psig (bar)	
		A	F	Brass	316 SS
1/4	-4-SA-E	1.40 (35.6)	3/4	2200 (151)	4400 (303)
1/2	-8-SA-E	1.94 (49.3)	1 1/16	2400 (165)	4900 (337)

Reducing Adapter

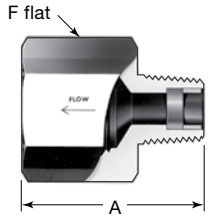

NPT Female Pipe Size in.	NPT Male Pipe Size in.	Basic Ordering Number	Dimensions in. (mm)		Working Pressure at 70°F (20°C) psig (bar)	
			A	F	Brass	316 SS
1/4	1/8	-4-SRA-2-E	1.26 (32.0)	3/4	3300 (227)	6600 (454)①
1/2	1/4	-8-SRA-4-E	1.76 (44.7)	1 1/16	2200 (151)	4400 (303)
	3/8	-8-SRA-6-E	1.83 (46.5)		2400 (165)	4900 (337)

① Maximum differential pressure: 5000 psig (344 bar).

Male NPT to Swagelok Tube Fitting

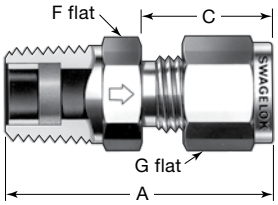

NPT Male Pipe Size in.	Tube OD in.	Basic Ordering Number	Dimensions in. (mm)				Working Pressure① at 70°F (20°C) psig (bar)	
			A	C	F	G	Brass	316 SS
1/4	1/4	-4-SM-A-400	1.48 (37.6)	0.70 (17.8)	9/16	9/16	2200 (151)	4400 (303)
	3/8	-4-SM-A-600	1.57 (39.9)	0.76 (19.3)	5/8	11/16		

① For more information about pressure ratings of Swagelok tube fittings, refer to Swagelok *Tubing Data* catalog, MS-01-107.

Additional Products

Pressure Regulators

Swagelok offers as full range of pressure regulators:

- Pressure-reducing models
- Back-pressure models
- Gas cylinder changeover model
- Vaporizing models

Refer to Swagelok *Pressure Regulators* catalog, MS-02-230, for additional information.

Tube Fittings

Swagelok gaugeable tube fittings and adapter fittings are available in sizes from 1/16 to 2 in. and 2 to 50 mm in a wide variety of materials and configurations.

Refer to Swagelok *Gaugeable Tube Fittings and Adapter Fittings* catalog, MS-01-140, for additional information.

Pressure Gauges For Panel Builders

Swagelok panel builders gauges monitor vacuum and positive system pressures up to 15 000 psi, 1000 bar, or 100 000 kPa and fit industry-standard 2 9/16 in. (65.0 mm) panel hole cutout.

Refer to Swagelok *Pressure Gauges for Panel Builders—PBG Series* catalog, MS-02-333, for additional information.

Tubing Products

Swagelok offers a wide variety of tubing products.

Contact your authorized Swagelok representative or see these Swagelok catalogs for more information:

- *Stainless Steel Seamless Tubing, Fractional, Metric, and Imperial Sizes* catalog, MS-01-181
- *Ultrahigh-Purity and High-Purity Stainless Steel Tubing, Fractional, Metric, and Imperial Sizes* catalog, MS-01-182

Transducers

Swagelok industrial pressure transducers electronically monitor fluid system pressure in a variety of analytical and process applications.

Refer to Swagelok *Industrial Pressure Transducers* catalog, MS-02-225, for additional information.

⚠ WARNING
Do not mix/interchange Swagelok products or components not governed by industrial design standards, including Swagelok tube fitting end connections, with those of other manufacturers.

Introduction

Since 1947, Swagelok has designed, developed, and manufactured high-quality, general-purpose and specialty fluid system products to meet the evolving needs of global industries. Our focus is on understanding our customers' needs, finding timely solutions, and adding value with our products and services.

We are pleased to provide this global edition of the book-bound *Swagelok Product Catalog,* which compiles more than 100 separate product catalogs, technical bulletins, and reference documents into one convenient, easy-to-use volume. Each product catalog is up to date at the time of printing, with its revision number shown on the last page of the individual catalog. Subsequent revisions will supersede the printed version and will be posted on the Swagelok website and in the Swagelok electronic Desktop Technical Reference (eDTR) tool.

For more information, visit your Swagelok website or contact your authorized Swagelok sales and service representative.

Warranty Information

Swagelok products are backed by The Swagelok Limited Lifetime Warranty. For a copy, visit swagelok.com or contact your authorized Swagelok representative.

Safe Product Selection
When selecting a product, the total system design must be considered to ensure safe, trouble-free performance. Function, material compatibility, adequate ratings, proper installation, operation, and maintenance are the responsibilities of the system designer and user.

⚠ WARNING
Do not mix/interchange Swagelok products or components not governed by industrial design standards, including Swagelok tube fitting end connections, with those of other manufacturers.

Not all trademarks listed below apply to this catalog.
Swagelok, Cajon, Ferrule-Pak, Goop, Hinging-Colleting, IGC, Kenmac, Micro-Fit, Nupro, Snoop, Sno-Trik, SWAK, VCO, VCR, Ultra-Torr, Whitey—TM Swagelok Company
15-7 PH—TM AK Steel Corp.
AccuTrak, Beacon, Westlock—TM Tyco International Services
Aflas—TM Asahi Glass Co., Ltd.
ASCO, El-O-Matic—TM Emerson
AutoCAD—TM Autodesk, Inc.
CSA—TM Canadian Standards Association
Crastin, DuPont, Kalrez, Krytox, Teflon, Viton—TM E.I. duPont Nemours and Company
DeviceNet—TM ODVA
Dyneon, Elgiloy, TFM—TM Dyneon
Elgiloy—TM Elgiloy Specialty Metals
FM—TM FM Global
Grafoil—TM GrafTech International Holdings, Inc.
Honeywell, MICRO SWITCH—TM Honeywell
MAC—TM MAC Valves
Microsoft, Windows—TM Microsoft Corp.
NACE—TM NACE International
PH 15-7 Mo, 17-7 PH—TM AK Steel Corp
picofast—Hans Turck KG
Pillar—TM Nippon Pillar Packing Company, Ltd.
Raychem—TM Tyco Electronics Corp.
Sandvik, SAF 2507—TM Sandvik AB
Simriz—TM Freudenberg-NOK
SolidWorks—TM SolidWorks Corporation
UL—Underwriters Laboratories Inc.
Xylan—TM Whitford Corporation
© 2022 Swagelok Company